Digital proportional relief valves high performance

piloted, with on-board pressure transducer

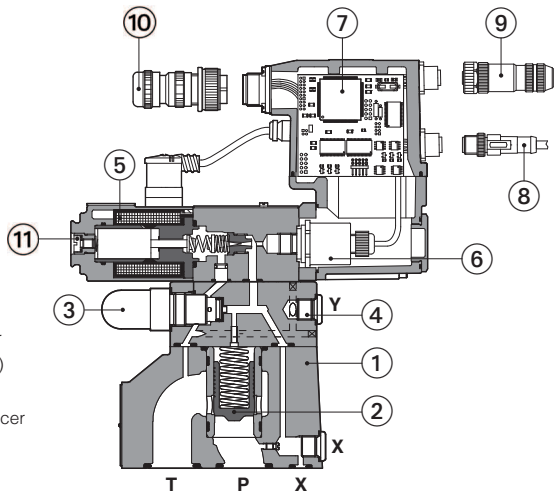

① Valve body
② Main poppet
③ Mechanical pressure limiter
④ Drain port G 1/4" (option /Y)
⑤ Proportional solenoid
⑥ On-board pressure transducer
⑦ On-board digital driver
⑧ USB connector
⑨ Fieldbus connector
⑩ Main connector
⑪ Screw for air bleeding

AGMZO-RES-P-BC-20

AGMZO-R, AGMZO-REB, AGMZO-RES

Poppet type, piloted, digital proportional relief valves with on-board pressure transducer for pressure closed loop controls.

R to be coupled with off-board driver.

REB basic execution, with on-board digital driver, analog reference signals and USB port for software functional parameters setting.

RES full execution, with on-board digital driver which includes also fieldbus interface for functional parameters setting, reference signals and real-time diagnostics.

Size: **10**, **20**, **32** - ISO 6264
Max flow: **200**, **400**, **600 l/min**
Max pressure: **350 bar**

1 MODEL CODE

AGMZO - **RES** - **P** - **BC** - **10** / **315** / ***** ***** / *****

Proportional pressure relief valve, piloted

R = for separated driver, see section 3
REB = basic on-board digital driver **(1)**
RES = full on-board digital driver **(2)**

P = with integral pressure transducer

Fieldbus interfaces, USB port always present **(3)**:
NP = Not present **BC** = CANopen
BP = PROFIBUS DP **EH** = EtherCAT

Valve size ISO 6264: **10, 20, 32**

Max regulated pressure:
100 = 100 bar **210** = 210 bar **315** = 315 bar **350** = 350 bar

Seals material, see section 11 :
- = NBR
PE = FKM
BT = NBR low temp.

Series number

Hydraulic options (4):
E = external pilot
Y = external drain (only pipe connection G ¼")

Electronics options, only for **REB** and **RES (4)**:
I = current reference input and monitor 4 ÷ 20 mA (omit for std voltage 0 ÷ 10 VDC)
Q = enable signal
Z = double power supply, enable, fault and monitor signals - 12 pin connector

(1) Only for **NP**
(2) Only for **BC**, **BP**, **EH**
(3) Omit for **R** execution
(4) For possible combined options, see section 15

2 HYDRAULIC SYMBOLS

AGMZO-R

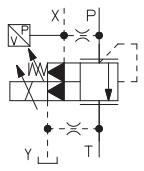

AGMZO-REB AGMZO-RES

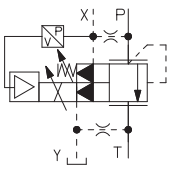

3 OFF-BOARD ELECTRONIC DRIVER - only for **R**

Drivers model	E-BM-RES
Type	Digital
Format	DIN rail panel format
Tech table	GS203

4 GENERAL NOTES

Atos digital proportionals valves are CE marked according to the applicable directives (e.g. Immunity and Emission EMC Directive).
Installation, wirings and start-up procedures must be performed according to the general prescriptions shown in tech table **FS900** and in the user manuals included in the E-SW-* programming software.

5 VALVE SETTINGS AND PROGRAMMING TOOLS

Valve's functional parameters and configurations, can be easily set and optimized using Atos E-SW programming software connected via USB port to the digital driver (see table **FS900**).
For fieldbus versions, the software permits valve's parameterization through USB port also if the driver is connected to the central machine unit via fieldbus.

The software is available in different versions according to the driver's options (see table **GS500**):

E-SW-BASIC	support:	NP (USB)	PS (Serial)	IR (Infrared)
E-SW-FIELDBUS	support:	BC (CANopen)	BP (PROFIBUS DP)	EH (EtherCAT)
		EW (POWERLINK)	EI (EtherNet/IP)	EP (PROFINET)
E-SW-*/PQ	support:	valves with SP, SF, SL alternated control (e.g. E-SW-BASIC/PQ)		

WARNING: drivers USB port is not isolated! For E-C-SB-USB/M12 cable, the use of isolator adapter is highly recommended for PC protection

WARNING: see tech table **GS500** for the list of countries where the Bluetooth adapter has been approved

USB or Bluetooth connection

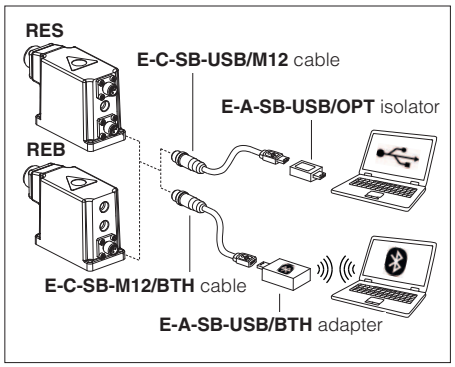

6 SMART TUNING

Smart tuning allows to adjust the valve dynamic response in order to match different hydraulic conditions and performance requirements.

The valve is provided with 3 factory settings for the pressure control:

- **dynamic** fast response time for best dynamic performances. Default factory setting for pressure valves
- **balanced** average response time suitable for major applications
- **smooth** attenuated response time for slow regulation without overshoots

Smart tuning setting can be switched from Dynamic (default) to Balanced or Smooth via software or fieldbus; if requested, performances can be further customized directly tuning each single control parameter. For details consult related manuals E-MAN-RI-* and Quickstart, see section 24.

Below indications have to be considered as a general guideline, being affected by hydraulic circuit stiffness, working flow and dead volume.

High stiffness - Low flow - Small volume

1 = dynamic
2 = balanced
3 = smooth

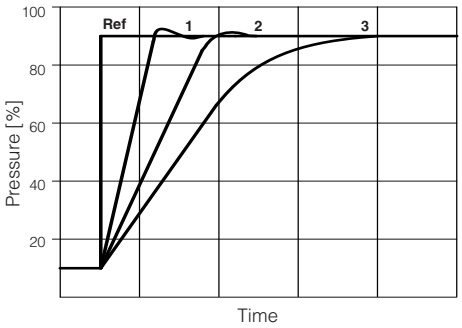

Low stiffness - High flow - Large volume

1 = dynamic
2 = balanced
3 = smooth

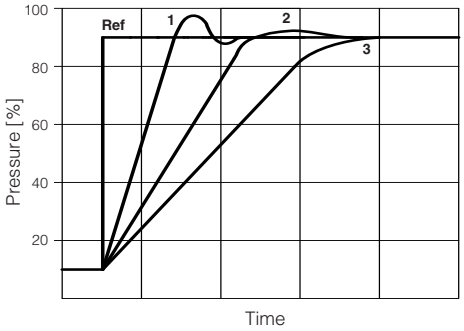

7 FIELDBUS - only for **RES**, see tech. table **GS510**

Fieldbus allows valve direct communication with machine control unit for digital reference, valve diagnostics and settings. These execution allow to operate the valves through fieldbus or analog signals available on the main connector.

8 GENERAL CHARACTERISTICS

Assembly position	Any position
Subplate surface finishing to ISO 4401	Acceptable roughness index: Ra ≤ 0,8, recommended Ra 0,4 – Flatness ratio 0,01/100
MTTFd valves according to EN ISO 13849	75 years, see technical table P007
Ambient temperature range	**R:** **Standard** = -20°C ÷ +70°C **/PE** option = -20°C ÷ +70°C **/BT** option = -40°C ÷ +60°C **REB, RES:** **Standard** = -20°C ÷ +60°C **/PE** option = -20°C ÷ +60°C **/BT** option = -40°C ÷ +60°C
Storage temperature range	**R:** **Standard** = -20°C ÷ +80°C **/PE** option = -20°C ÷ +80°C **/BT** option = -40°C ÷ +70°C **REB, RES:** **Standard** = -20°C ÷ +70°C **/PE** option = -20°C ÷ +70°C **/BT** option = -40°C ÷ +70°C
Surface protection	Zinc coating with black passivation, galvanic treatment (driver housing for REB and RES)
Corrosion resistance	Salt spray test (EN ISO 9227) > 200 h
Compliance	CE according to EMC directive 2014/30/EU (Immunity: EN 61000-6-2; Emission: EN 61000-6-3) RoHS Directive 2011/65/EU as last update by 2015/65/EU REACH Regulation (EC) n°1907/2006

9 HYDRAULIC CHARACTERISTICS - based on mineral oil ISO VG 46 at 50 °C

Valve model		AGMZO-*-10	AGMZO-*-20	AGMZO-*-32
Max regulated pressure	[bar]	100; 210; 315; 350		
Max pressure at port P	[bar]	350		
Max pressure at port T	[bar]	210		
Min regulated pressure	[bar]	see min. pressure / flow diagrams at section 12		
Max flow	[l/min]	200	400	600
Response time 0-100% step signal (depending on installation) **(1)**	[ms]	≤ 80	≤ 100	≤ 115
Hysteresis		≤ 0,5 [% of max pressure]		
Linearity		≤ 1,0 [% of max pressure]		
Repeatability		≤ 0,2 [% of max pressure]		
Thermal drift		zero point displacement < 1% at ΔT = 40°C		

Note: above performance data refer to valves coupled with Atos electronic drivers, see section 3

(1) Average response time value; the pressure variation in consequence of a modification of the reference input signal to the valve is affected by the stiffness of the hydraulic circuit: greater is the stiffness of the circuit, faster is the dynamic response, see section 6

10 ELECTRICAL CHARACTERISTICS

Power supplies	Nominal : +24 VDC Rectified and filtered : VRMS = 20 ÷ 32 VMAX (ripple max 10 % VPP)			
Max power consumption	**R** = 30 W **REB**, **RES** = 50 W			
Max. solenoid current	2,6 A			
Coil resistance R at 20°C	3 ÷ 3,3 Ω			
Analog input signals	Voltage: range ±10 VDC (24 VMAX tollerant) Input impedance: Ri > 50 kΩ Current: range ±20 mA Input impedance: Ri = 500 Ω			
Monitor output	Voltage: maximum range 0 ÷ 10 VDC @ max 5 mA Current: maximum range 0 ÷ 20 mA @ max 500 Ω load resistance			
Enable input	Range: 0 ÷ 9 VDC (OFF state), 15 ÷ 24 VDC (ON state), 9 ÷ 15 VDC (not accepted); Input impedance: Ri > 87 kΩ			
Fault output	Output range : 0 ÷ 24 VDC (ON state ≅ VL+ [logic power supply] ; OFF state ≅ 0 V) @ max 50 mA; external negative voltage not allowed (e.g. due to inductive loads)			
Pressure transducer **(1)**	E-ATR-8/*/I Output signal: 4 ÷ 20 mA (see tech table **GS465**)			
Alarms	Solenoid not connected/short circuit, cable break with current reference signal, over/under temperature, current control monitoring, power supplies level, pressure transducer failure			
Insulation class	H (180°) Due to the occuring surface temperatures of the solenoid coils, the European standards ISO 13732-1 and EN982 must be taken into account			
Protection degree to DIN EN60529	**R** = IP65; **REB**, **RES** = IP66 / IP67 with mating connectors			
Duty factor	Continuous rating (ED=100%)			
Tropicalization	Tropical coating on electronics PCB			
Additional characteristics	Short circuit protection of solenoid's current supply; current control by P.I.D. with rapid solenoid switching; protection against reverse polarity of power supply			
Communication interface	USB Atos ASCII coding	CANopen EN50325-4 + DS408	PROFIBUS DP EN50170-2/IEC61158	EtherCAT EC 61158
Communication physical layer	not insulated USB 2.0 + USB OTG	optical insulated CAN ISO11898	optical insulated RS485	Fast Ethernet, insulated 100 Base TX
Recommended wiring cable	LiYCY shielded cables, see section 21			

(1) In case of pressure transducer failure, the valve's reaction can be configured through Atos E-SW software to:
- cut off the current to solenoid, therefore the regulated pressure will be reduced to minimum value (default setting)
- automatically switch the pressure control from closed loop (dynamic, balaced, smooth) to open loop, to let the valve to temporarily operate with reduced regulation accuracy

Note: a maximum time of 500 ms (depending on communication type) have be considered between the driver energizing with the 24 VDC power supply and when the valve is ready to operate. During this time the current to the valve coils is switched to zero.

11 SEALS AND HYDRAULIC FLUIDS - for other fluids not included in below table, consult our technical office

Seals, recommended fluid temperature		NBR seals (standard) = -20°C ÷ +60°C (+80°C for **R**), with HFC hydraulic fluids = -20°C ÷ +50°C FKM seals (/PE option) = -20°C ÷ +80°C NBR low temp. seals (/BT option) = -40°C ÷ +60°C, with HFC hydraulic fluids = -40°C ÷ +50°C		
Recommended viscosity		20 ÷ 100 mm²/s - max allowed range 15 ÷ 380 mm²/s		
Max fluid contamination level	normal operation	ISO4406 class 18/16/13 NAS1638 class 7		see also filter section at www.atos.com or KTF catalog
	longer life	ISO4406 class 16/14/11 NAS1638 class 5		
Hydraulic fluid		**Suitable seals type**	**Classification**	**Ref. Standard**
Mineral oils		NBR, FKM, NBR low temp.	HL, HLP, HLPD, HVLP, HVLPD	DIN 51524
Flame resistant without water		FKM	HFDU, HFDR	ISO 12922
Flame resistant with water		NBR, NBR low temp.	HFC	

12 DIAGRAMS (based on mineral oil ISO VG 46 at 50 °C)

1 = Regulation diagrams
with flow rate Q = 50 l/min

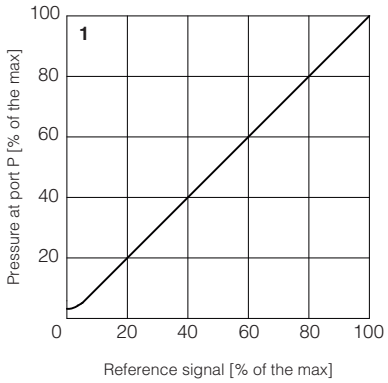

2 = Pressure/flow diagrams
with reference signal set at Q = 50 l/min

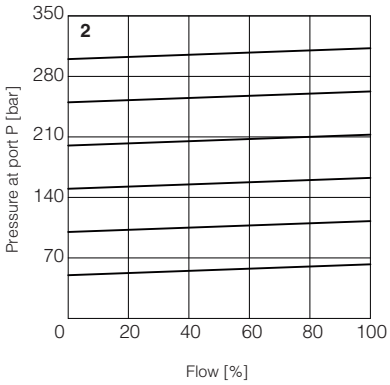

3-8 = Min. pressure/flow diagrams
with zero reference signal

3 = AGMZO-*-10/100, 210, 315
4 = AGMZO-*-10/350
5 = AGMZO-*-20/100, 210, 315
6 = AGMZO-*-20/350
7 = AGMZO-*-32/100, 210, 315
8 = AGMZO-*-32/350

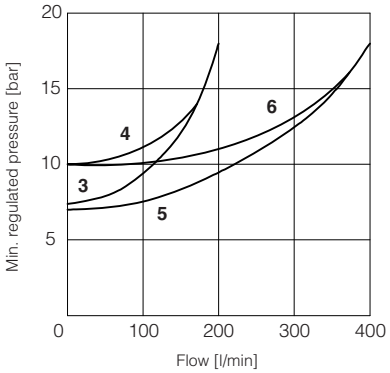

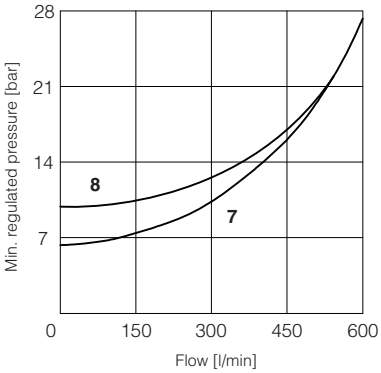

13 HYDRAULIC OPTIONS

E = External pilot option to be selected when the pilot pressure is supplied from a different line respect to the P main line.
With option E the internal connection between port P and X of the valve is plugged.
The pilot pressure must be connected to the X port available on the valve's mounting surface or on main body (threaded pipe connection G ¼").

Y = The external drain is mandatory in case the main line T is subjected to pressure peaks or it is pressurized.
The Y drain port has a threaded connection G ¼" available on the pilot stage body.

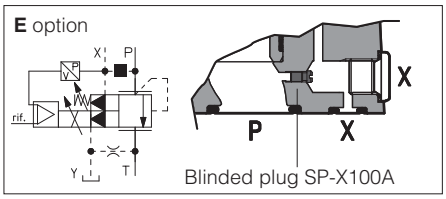

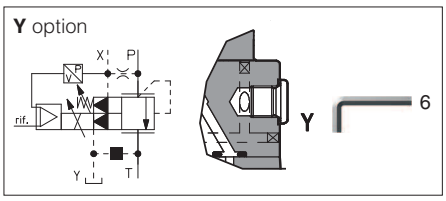

14 ELECTRONICS OPTIONS - only for **REB** and **RES**

I = This option provides 4 ÷ 20 mA current reference and monitor signals, instead of the standard 0 ÷ 10 VDC. Input signal can be reconfigured via software selecting between voltage and current, within a maximum range of ±10 VDC or ±20 mA.
It is normally used in case of long distance between the machine control unit and the valve or where the reference signal can be affected by electrical noise; the valve functioning is disabled in case of reference signal cable breakage.

Q = This option permits to inhibit the valve function without removing the power supply to the driver. Upon disable command the current to the solenoid is zeroed and the valve's spool moves to rest position.
The option /Q is suggested for all cases where the valve has to be frequently inhibited during the machine cycle – see 19.5 for signal specifications.

Z = This option provides, on the 12 pin main connector, the following additional features:
Fault output signal - see 19.6
Enable input signal - see above option /Q
Power supply for driver's logics and communication - see 19.2

15 POSSIBLE COMBINED OPTIONS

Hydraulic options: all combination possible
Electronics options: /IQ, /IZ

16 MECHANICAL PRESSURE LIMITER

The AGMZO are provided with mechanical pressure limiter acting as protection against overpressure. For safety reasons the factory setting of the mechanical pressure limiter is fully unloaded (min pressure). At the first commissioning it must be set at a value lightly higher than the max pressure regulated with the proportional control.
For the pressure setting of the mechanical pressure limiter, proceed according to following steps:

- apply the max reference input signal to the valve's driver. The system pressure will not increase until the mechanical pressure limiter remains unloaded.
- turn clockwise the adjustment screw ① until the system pressure will increase up to a stable value corresponding to the pressure setpoint at max reference input signal.
- turn clockwise the adjustment screw ① of additional 1 or 2 turns to ensure that the mechanical pressure limiter remains closed during the proportional valve working.

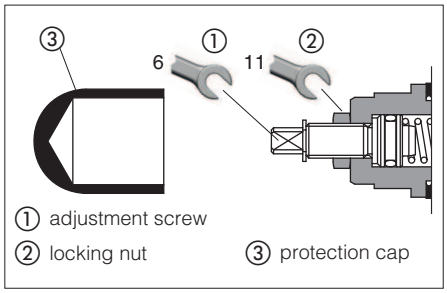

17 REMOTE PRESSURE UNLOADING

The **P** main line can be remotely unloaded by connecting the valve X port to a solenoid valve as shown in the below scheme (venting valve).
This function can be used in emergency to unload the system pressure by-passing the proportional control.

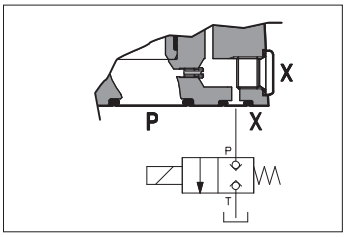

18 AIR BLEEDING

At the first valve commissioning the air eventually trapped inside the solenoid must be bled-off though the screw ① located at the rear side of the solenoid housing.
The presence of air may cause pressure instability and vibrations.

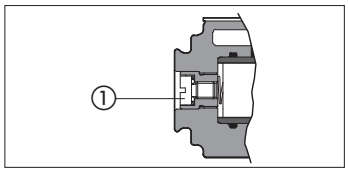

19 POWER SUPPLY AND SIGNALS SPECIFICATIONS - only for **REB** and **RES**

Generic electrical output signals of the valve (e.g. fault or monitor signals) must not be directly used to activate safety functions, like to switch-ON/OFF the machine's safety components, as prescribed by the European standards (Safety requirements of fluid technology systems and components-hydraulics, ISO 4413).

19.1 Power supply (V+ and V0)

The power supply must be appropriately stabilized or rectified and filtered: apply at least a 10000 μF/40 V capacitance to single phase rectifiers or a 4700 μF/40 V capacitance to three phase rectifiers. In case of separate power supply see 19.2.

⚠ A safety fuse is required in series to each power supply: 2,5 A time lag fuse.

19.2 Power supply for driver's logic and communication (VL+ and VL0) - only for /Z

The power supply for driver's logic and communication must be appropriately stabilized or rectified and filtered: apply at least a 10000 μF/40 V capacitance to single phase rectifiers or a 4700 μF/40 V capacitance to three phase rectifiers.
The separate power supply for driver's logic on pin 9 and 10, allow to remove solenoid power supply from pin 1 and 2 maintaining active the diagnostics, USB and fieldbus communications.

⚠ A safety fuse is required in series to each driver's logic and communication power supply: 500 mA fast fuse.

19.3 Pressure reference input signal (P_INPUT+)

The driver controls in closed loop the current to the valve pressure proportionally to the external reference input signal.
Reference input signal is factory preset according to selected valve code, defaults are 0 ÷ 10 VDC for standard and 4 ÷ 20 mA for /I option.
Input signal can be reconfigured via software selecting between voltage and current, within a maximum range of ±10 VDC or ± 20 mA.
Drivers with fieldbus interface (BC, BP, EH) can be software set to receive reference signal directly by the machine control unit (fieldbus reference).
Analog reference input signal can be used as on-off commands with input range 0 ÷ 24 VDC.

19.4 Pressure monitor output signal (P_MONITOR)

The driver generates an analog output signal proportional to the actual pressure of the valve; the monitor output signal can be software set to show other signals available in the driver (e.g. analog reference, fieldbus reference).
Monitor output signal is factory preset according to selected valve code, defaults settings are 0 ÷10 VDC for standard and 4 ÷ 20 mA for /I option.
Output signal can be reconfigured via software selecting between voltage and current, within a maximum range of 0 ÷10 VDC or 0 ÷ 20 mA.

19.5 Enable input signal (ENABLE) - not for standard

To enable the driver, supply a 24 VDC on pin 3 (pin C): Enable input signal allows to enable/disable the current supply to the solenoid, without removing the electrical power supply to the driver; it is used to active the communication and the other driver functions when the valve must be disabled for safety reasons. This condition **does not comply** with norms IEC 61508 and ISO 13849.
Enable input signal can be used as generic digital input by software selection.

19.6 Fault output signal (FAULT) - only for /Z option

Fault output signal indicates fault conditions of the driver (solenoid short circuits/not connected, reference signal broken for 4 ÷ 20 mA input, etc.).
Fault presence corresponds to 0 VDC, normal working corresponds to 24 VDC.
Fault status is not affected by the Enable input signal.

20 ELECTRONIC CONNECTIONS

20.1 Main connector signals - 7 pin (A1) Standard and /Q option - for REB and RES

PIN	Standard	/Q	TECHNICAL SPECIFICATIONS	NOTES
A	**V+**		Power supply 24 VDC Rectified and filtered: VRMS = 20 ÷ 32 VMAX (ripple max 10 % VPP)	Input - power supply
B	**V0**		Power supply 0 VDC	Gnd - power supply
C	**AGND**		Analog ground	Gnd - analog signal
		ENABLE	Enable (24 VDC) or disable (0 VDC) the driver, referred to V0	Input - on/off signal
D	**P_INPUT+**		Pressure reference input signal: ±10 VDC / ±20 mA maximum range Defaults are 0 ÷ 10 VDC for standard and 4 ÷ 20 mA for /I option	Input - analog signal **Software selectable**
E	**INPUT-**		Negative reference input signal for P_INPUT+	Input - analog signal
F	**P_MONITOR** referred to: AGND	V0	Pressure monitor output signal: 0 ÷ 10 VDC / 0 ÷ 20 mA maximum range Defaults are 0 ÷ 10 VDC for standard and 4 ÷ 20 mA for /I option	Output - analog signal **Software selectable**
G	**EARTH**		Internally connected to driver housing	

20.2 Main connector signals - 12 pin (A2) /Z option - for REB and RES

PIN	/Z	TECHNICAL SPECIFICATIONS	NOTES
1	**V+**	Power supply 24 VDC Rectified and filtered: VRMS = 20 ÷ 32 VMAX (ripple max 10 % VPP)	Input - power supply
2	**V0**	Power supply 0 VDC	Gnd - power supply
3	**ENABLE**	Enable (24 VDC) or disable (0 VDC) the driver, referred to VL0	Input - on/off signal
4	**P_INPUT+**	Pressure reference input signal: ±10 VDC / ±20 mA maximum range Defaults are 0 ÷ 10 VDC for standard and 4 ÷ 20 mA for /I option	Input - analog signal **Software selectable**
5	**INPUT-**	Negative reference input signal for P_INPUT+	Input - analog signal
6	**P_MONITOR**	Pressure monitor output signal: 0 ÷ 10 VDC / 0 ÷ 20 mA maximum range, referred to VL0 Defaults are 0 ÷ 10 VDC for standard and 4 ÷ 20 mA for /I option	Output - analog signal **Software selectable**
7	**NC**	Do not connect	
8	**NC**	Do not connect	
9	**VL+**	Power supply 24 VDC for driver's logic and communication	Input - power supply
10	**VL0**	Power supply 0 VDC for driver's logic and communication	Gnd - power supply
11	**FAULT**	Fault (0 VDC) or normal working (24 VDC), referred to VL0	Output - on/off signal
PE	**EARTH**	Internally connected to driver housing	

Note: do not disconnect VL0 before VL+ when the driver is connected to PC USB port

20.3 Communication connectors - for REB (B) and RES (B) - (C)

(B) **USB connector - M12 - 5 pin** always present

PIN	SIGNAL	TECHNICAL SPECIFICATION (1)
1	**+5V_USB**	Power supply
2	**ID**	Identification
3	**GND_USB**	Signal zero data line
4	**D-**	Data line -
5	**D+**	Data line +

(C1) **BC fieldbus execution, connector - M12 - 5 pin** (2)

PIN	SIGNAL	TECHNICAL SPECIFICATION (1)
1	**CAN_SHLD**	Shield
2	**NC**	do not connect
3	**CAN_GND**	Signal zero data line
4	**CAN_H**	Bus line (high)
5	**CAN_L**	Bus line (low)

(C2) **BP fieldbus execution, connector - M12 - 5 pin** (2)

PIN	SIGNAL	TECHNICAL SPECIFICATION (1)
1	**+5V**	Termination supply signal
2	**LINE-A**	Bus line (high)
3	**DGND**	Data line and termination signal zero
4	**LINE-B**	Bus line (low)
5	**SHIELD**	

(C3) (C4) **EH fieldbus execution, connector - M12 - 4 pin** (2)

PIN	SIGNAL	TECHNICAL SPECIFICATION (1)
1	**TX+**	Transmitter
2	**RX+**	Receiver
3	**TX-**	Transmitter
4	**RX-**	Receiver
Housing	**SHIELD**	

(1) Shield connection on connector's housing is recommended

(2) Only for **RES** execution

20.4 Solenoid connection - only for R

PIN	SIGNAL	TECHNICAL SPECIFICATION	Connector code 666
1	**COIL**	Power supply	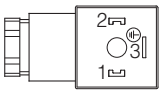
2	**COIL**	Power supply	
3	**GND**	Ground	

20.5 Pressure transducer connection - only for R

PIN	SIGNAL	TECHNICAL SPECIFICATION	Connector code ZBE-08
1	**V+**	Power supply	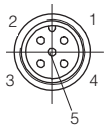
2	**NC**	Not connected	
3	**TR**	Output signal 4 ÷ 20 mA	
4	**NC**	Not connected	
5	**NC**	Not connected	

20.6 REB connections layout

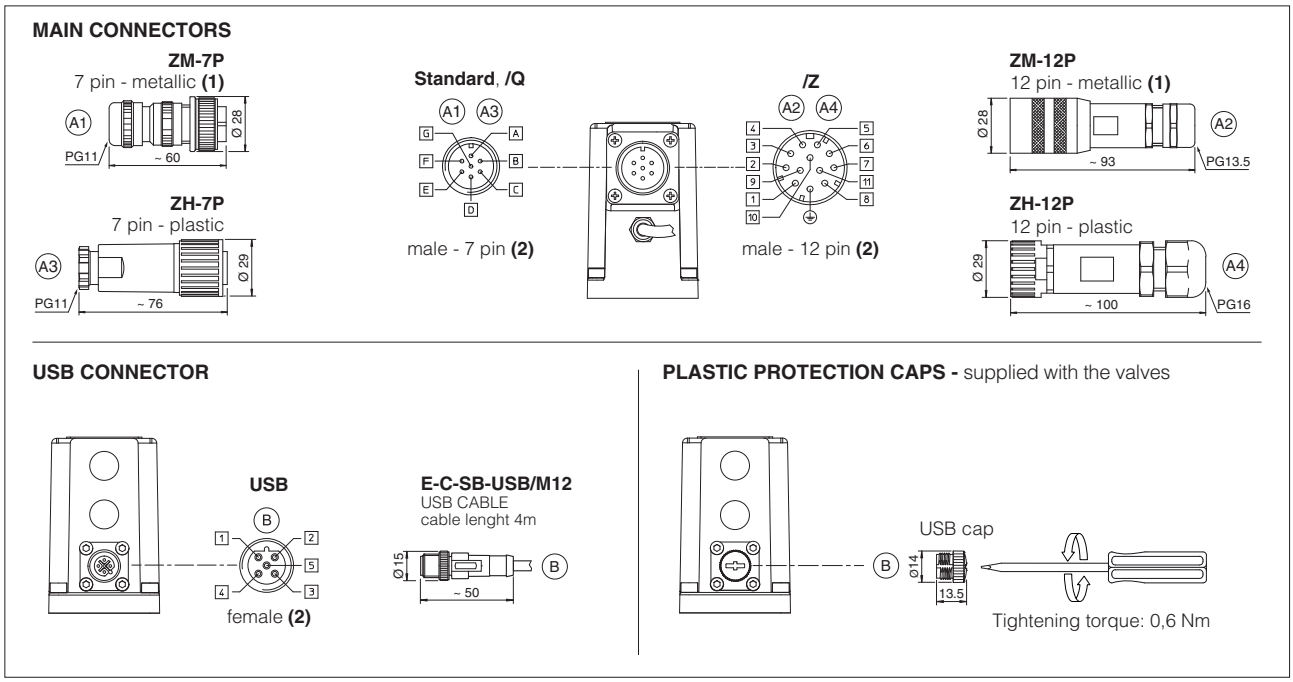

(1) Use of metallic connectors is strongly recommended in order to fulfill EMC requirements **(2)** Pin layout always referred to driver's view

20.7 RES connections layout

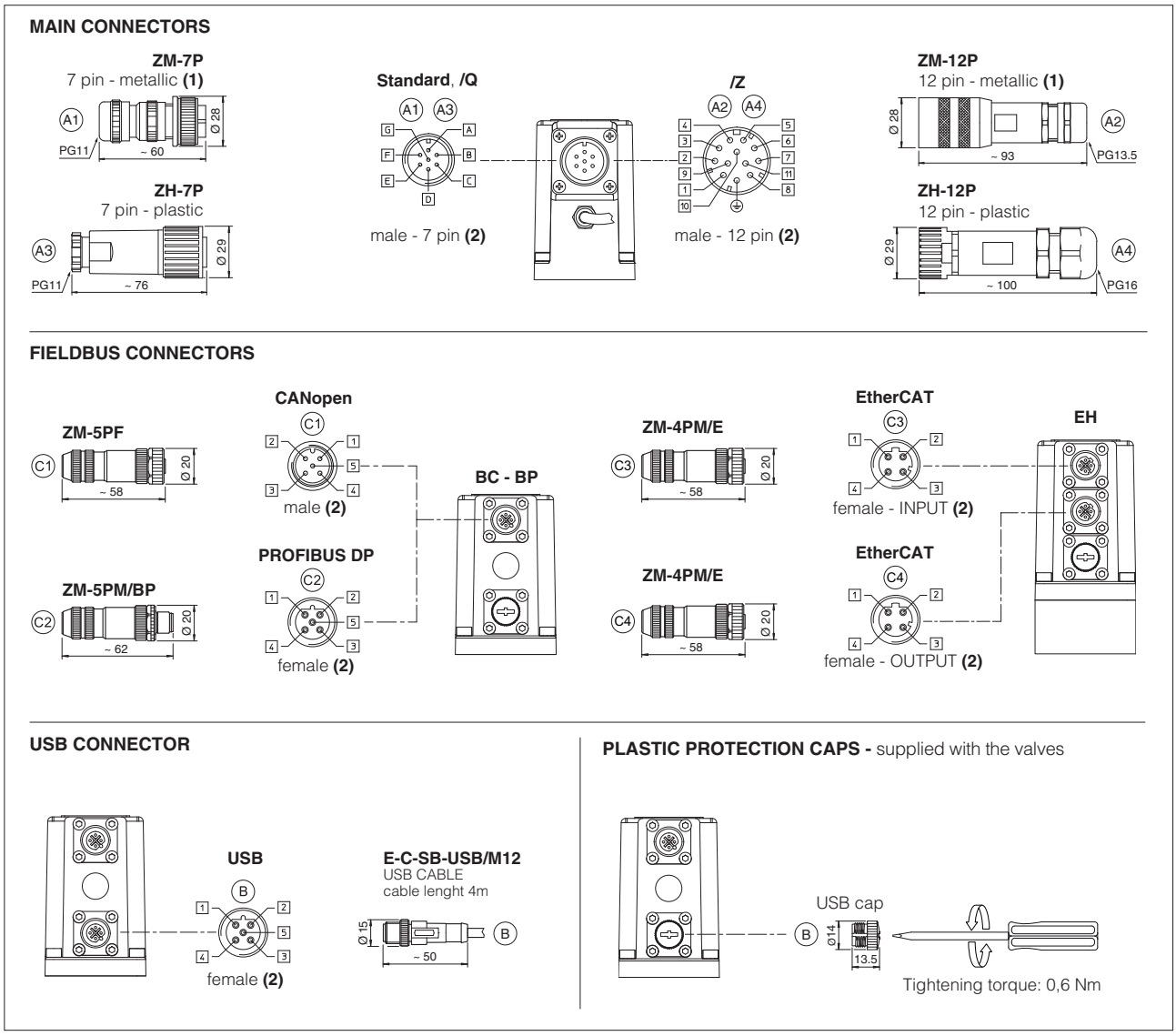

(1) Use of metallic connectors is strongly recommended in order to fulfill EMC requirements **(2)** Pin layout always referred to driver's view

21 CONNECTORS CHARACTERISTICS - to be ordered separately

21.1 Main connectors - 7 pin - for **REB** and **RES**

CONNECTOR TYPE	POWER SUPPLY	POWER SUPPLY
CODE	(A1) ZM-7P	(A3) ZH-7P
Type	7pin female straight circular	7pin female straight circular
Standard	According to MIL-C-5015	According to MIL-C-5015
Material	Metallic	Plastic reinforced with fiber glass
Cable gland	PG11	PG11
Recommended cable	LiYCY 7 x 0,75 mm^2 max 20 m (logic and power supply) or LiYCY 7 x 1 mm^2 max 40 m (logic and power supply)	LiYCY 7 x 0,75 mm^2 max 20 m (logic and power supply) or LiYCY 7 x 1 mm^2 max 40 m (logic and power supply)
Conductor size	up to 1 mm^2 - available for 7 wires	up to 1 mm^2 - available for 7 wires
Connection type	to solder	to solder
Protection (EN 60529)	IP 67	IP 67

21.2 Main connectors - 12 pin - for **REB** and **RES**

CONNECTOR TYPE	POWER SUPPLY	POWER SUPPLY
CODE	(A2) ZM-12P	(A4) ZH-12P
Type	12pin female straight circular	12pin female straight circular
Standard	DIN 43651	DIN 43651
Material	Metallic	Plastic reinforced with fiber glass
Cable gland	PG13,5	PG16
Recommended cable	LiYCY 12 x 0,75 mm^2 max 20 m (logic and power supply)	LiYCY 10 x 0,14mm^2 max 40 m (logic) LiYY 3 x 1mm^2 max 40 m (power supply)
Conductor size	0,5 mm^2 to 1,5 mm^2 - available for 12 wires	0,14 mm^2 to 0,5 mm^2 - available for 9 wires 0,5 mm^2 to 1,5 mm^2 - available for 3 wires
Connection type	to crimp	to crimp
Protection (EN 60529)	IP 67	IP 67

21.3 Fieldbus communication connectors - only for **RES**

CONNECTOR TYPE	BC CANopen (1)		BP PROFIBUS DP (1)		EH EtherCAT (2)
CODE	(C1) ZM-5PF	(C2) ZM-5PM	(C1) ZM-5PF/BP	(C2) ZM-5PM/BP	(C1) (C2) ZM-4PM/E
Type	5 pin female straight circular	5 pin male straight circular	5 pin female straight circular	5 pin male straight circular	4 pin male straight circular
Standard	M12 coding A – IEC 61076-2-101		M12 coding B – IEC 61076-2-101		M12 coding D – IEC 61076-2-101
Material	Metallic		Metallic		Metallic
Cable gland	Pressure nut - cable diameter 6÷8 mm		Pressure nut - cable diameter 6÷8 mm		Pressure nut - cable diameter 4÷8 mm
Cable	CANbus Standard (DR 303-1)		PROFIBUS DP Standard		Ethernet standard CAT-5
Connection type	screw terminal		screw terminal		terminal block
Protection (EN 60529)	IP67		IP 67		IP 67

(1) E-TRM-** terminators can be ordered separately - see tech table **GS500**

(2) Internally terminated

22 FASTENING BOLTS AND SEALS

	AGMZO-*-10	AGMZO-*-20	AGMZO-*-32
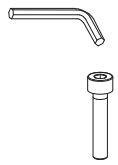	**Fastening bolts:** 4 socket head screws M12x35 class 12.9 Tightening torque = 125 Nm	**Fastening bolts:** 4 socket head screws M16x50 class 12.9 Tightening torque = 300 Nm	**Fastening bolts:** 4 socket head screws M20x60 class 12.9 Tightening torque = 600 Nm
	Seals: 2 OR 123 Diameter of ports P, T: Ø 14 mm 1 OR 109/70 Diameter of port X: Ø 3,2 mm	**Seals:** 2 OR 4112 Diameter of ports P, T: Ø 24 mm 1 OR 109/70 Diameter of port X: Ø 3,2 mm	**Seals:** 2 OR 4131 Diameter of ports P, T: Ø 28 mm 1 OR 109/70 Diameter of port X: Ø 3,2 mm

SIZE 10

ISO 6264: 2007
Mounting surface: 6264-06-09-1-97
(see table P005)

	Mass [kg]		
	R	REB, RES	RES-EH
AGMZO-*-10	5,7	6,2	6,3

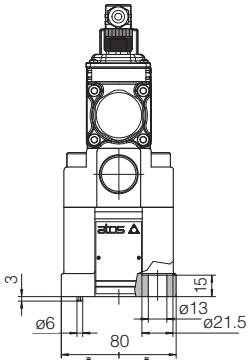

AGMZO-R-P-10

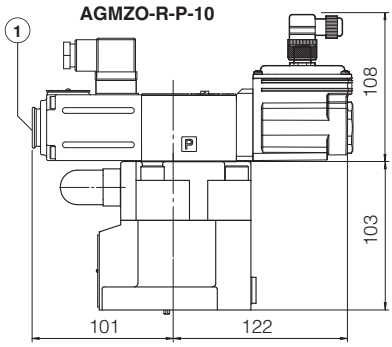

AGMZO-REB-P-NP-10
AGMZO-RES-P-BC-10
AGMZO-RES-P-BP-10

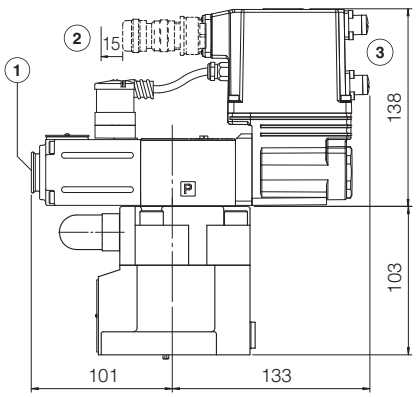

AGMZO-RES-P-EH-10

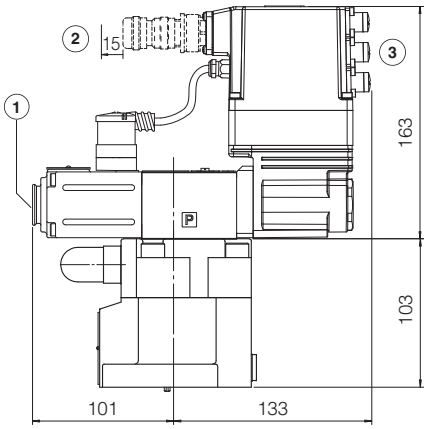

SIZE 20

ISO 6264: 2007
Mounting surface: 6264-08-13-1-97
(see table P005)

	Mass [kg]		
	R	REB, RES	RES-EH
AGMZO-*-20	6,9	7,4	7,5

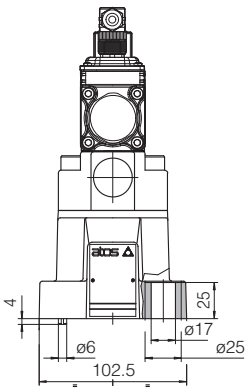

AGMZO-R-P-20

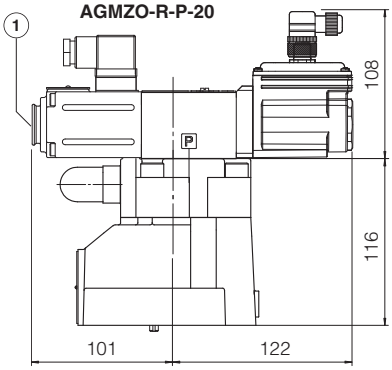

AGMZO-REB-P-NP-20
AGMZO-RES-P-BC-20
AGMZO-RES-P-BP-20

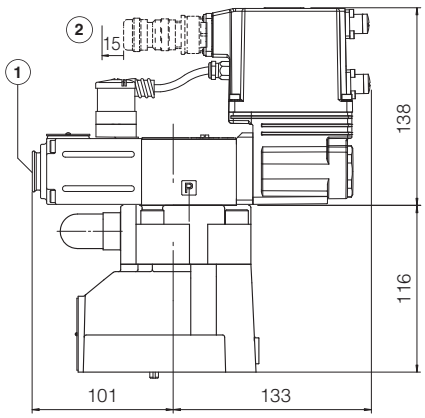

AGMZO-RES-P-EH-20

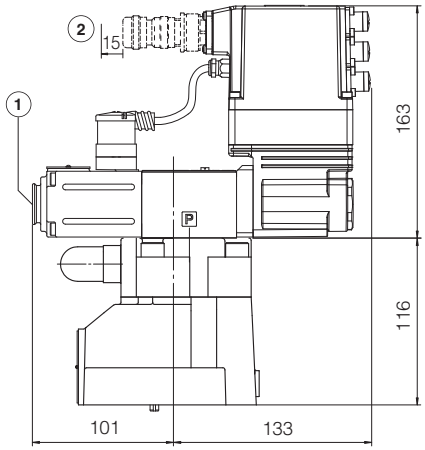

(1) = Air bleeding, see section 18

(2) = Space to remove the connectors

(3) = The dimensions of all connectors must be considered, see section 20.6 and 20.7

SIZE 32

ISO 6264: 2007
Mounting surface: 6264-10-17-1-97
(see table P005)
(with M20 fixing holes instead of standard M18)

	Mass [kg]		
	R	**REB, AES**	**RES-EH**
AGMZO-*-32	8,3	8,8	8,9

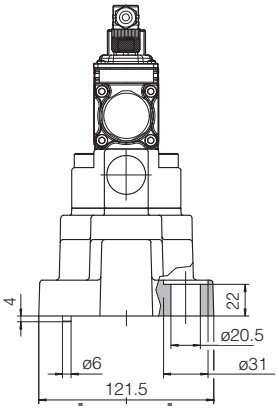

AGMZO-R-P-32

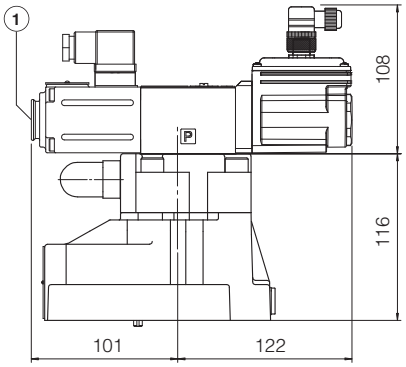

AGMZO-REB-P-NP-32
AGMZO-RES-P-BC-32
AGMZO-RES-P-BP-32

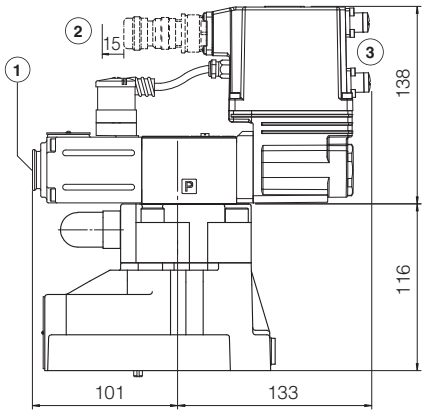

AGMZO-RES-P-EH-32

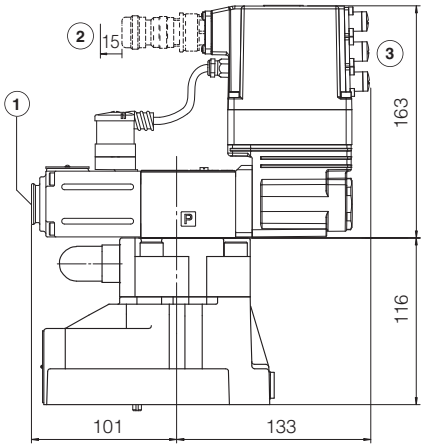

(1) = Air bleeding, see section 18
(2) = Space to remove the connectors
(3) = The dimensions of all connectors must be considered, see section 20.6 and 20.7

24 RELATED DOCUMENTATION

FS001	Basics for digital electrohydraulics	**P005**	Mounting surfaces for electrohydraulic valves
FS900	Operating and maintenance information for proportional valves	**QB400**	Quickstart for REB valves commissioning
GS203	E-BM-RES digital driver	**QF400**	Quickstart for RES valves commissioning
GS500	Programming tools	**E-MAN-BM-RES**	RES user manual (off-board)
GS510	Fieldbus	**E-MAN-RI-REB**	REB user manual
K800	Electric and electronic connectors	**E-MAN-RI-RES**	RES user manual