Hand & mechanical directional valves

ISO 4401 sizes 06, 10, 16 and 25

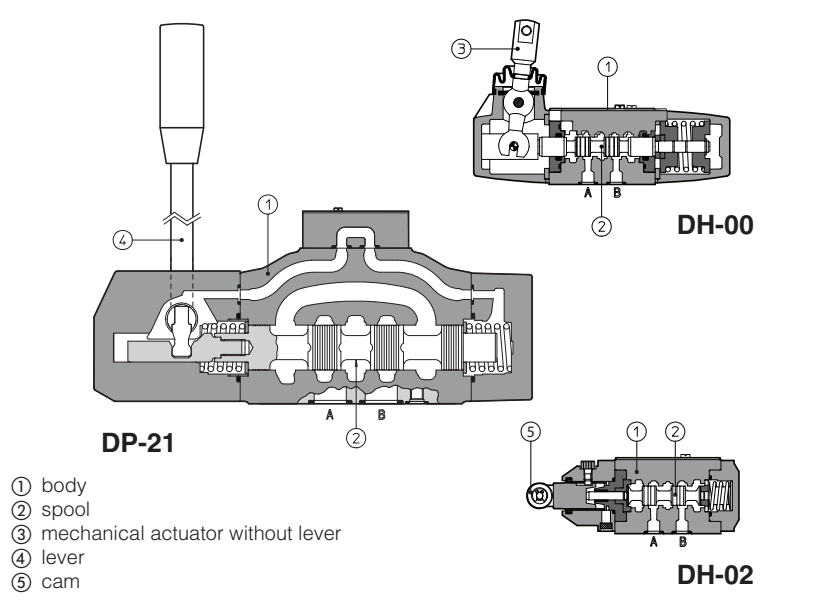

① body
② spool
③ mechanical actuator without lever
④ lever
⑤ cam

Hand & mechanical operated directional valves are spool type, three or four way, two or three position valves, available with following actuator types:
- mechanical actuator: general purpose execution for connection to customer device for the valve's remote operation
- hand-lever
- cam (only for DH and DK).

Valve sizes and max flow:

DH-0 = size 06, flow up to 50 l/min
DK-10 (11) = size 10, flow up to 100 l/min
DK-12 = size 10, flow up to 140 l/min
DP-2 = size 16, flow up to 300 l/min
DP-4 = size 25, flow up to 700 l/min

Max pressure:
350 bar for DH-0, DP-2, DP-4
315 bar for DK-1*

1 MODEL CODE

DH-0	1	1	3 /	C /	A	** /	*

Directional control valve, size:
DH-0 = 06
DK-1 = 10
DP-2 = 16
DP-4 = 25

Type of actuator:
0 = mechanical, without lever
1 = hand-lever
2 = cam (only for DH-0 and DK-1)

Valve configuration, **see sections 2** and **3**
0 = free, without springs
1 = spring centered, without detent
2 = retun to internal position
3 = return to external position
4 = 3 position, with detent
5 = 2 external positions, with detent
6 = centre plus external positions, with detent
7 = return to external position from the centre position
8 = return to the centre position from the external position

Spool type, see section 3

Only for DH-01 hand-lever valves:
/C = short hand - lever and reducend actuation force

Options:
/A = actuator device mounted on side of port B

Lever position to be specified for DH-00, DH-01 and DK-00, DK-01 with configuration 6, 7, 8, see section 3 for hydraulic connections:
/I = in rest position the lever is inclined towards the valve body
/E = in rest position the lever is inclined in opposite side

Only for DK-1:
/Y = external drain

Series number

Seals material:
- = NBR
PE = FKM

2 RANGE OF VALVE'S MODELS

VALVE TYPE	SIZE	VALVE CONFIGURATION								
		0	1	2	3	4	5	6	7	8
DH-00	06	●	●	●	●	●	●	●	●	●
DH-01		●	●	●	●	●	●	●	●	●
DH-02					●				●	●
DK-10	10	●	●	●	●	●	●	●	●	●
DK-11		●	●	●	●	●	●	●	●	●
DK-12					●				●	●
DP-20	16		●		●	●	●			
DP-21			●		●	●	●			
DP-40	25		●		●	●	●			
DP-41			●		●	●	●			

3 CONFIGURATIONS and SPOOLS - for intermediate passages, see tab. E001

DH-00*, DH-01* and DK-10*, DK-11* - mechanical and hand lever actuator

Configurations

DH-000* DK-100* DH-010* DK-110*

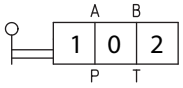

DH-000*/A DK-100*/A DH-010*/A DK-110*/A

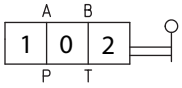

DH-006*/E DK-106*/E DH-016*/E DK-116*/E

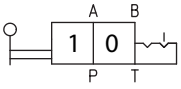

DH-006*/EA DK-106*/EA DH-016*/EA DK-116*/EA

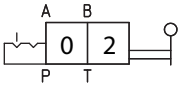

DH-001* DK-101* DH-011* DK-111*

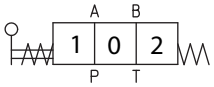

DH-001*/A DK-101*/A DH-011*/A DK-111*/A

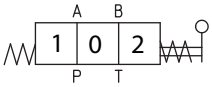

DH-006*/I DK-106*/I DH-016*/I DK-116*/I

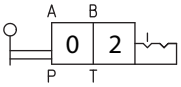

DH-006*/IA DK-106*/IA DH-016*/IA DK-116*/IA

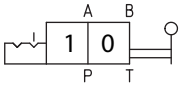

DH-002* DK-102* DH-012* DK-112*

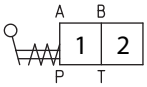

DH-002*/A DK-102*/A DH-012*/A DK-112*/A

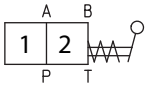

DH-007*/E DK-107*/E DH-017*/E DK-117*/E

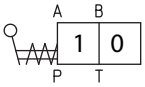

DH-007*/EA DK-107*/EA DH-017*/EA DK-117*/EA

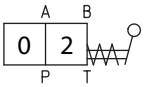

DH-003* DK-103* DH-013* DK-113*

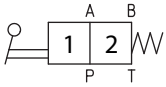

DH-003*/A DK-103*/A DH-013*/A DK-113*/A

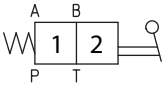

DH-007*/I DK-107*/I DH-017*/I DK-117*/I

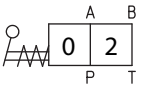

DH-007*/IA DK-107*/IA DH-017*/IA DK-117*/IA

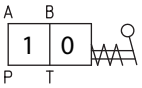

DH-004* DK-104* DH-014* DK-114*

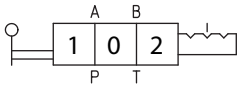

DH-004*/A DK-104*/A DH-014*/A DK-114*/A

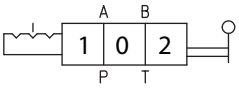

DH-008*/E DK-108*/E DH-018*/E DK-118*/E

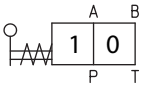

DH-008*/EA DK-108*/EA DH-018*/EA DK-118*/EA

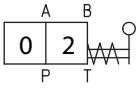

DH-005* DK-105* DH-015* DK-115*

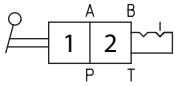

DH-005*/A DK-105*/A DH-015*/A DK-115*/A

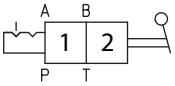

DH-008*/I DK-108*/I DH-018*/I DK-118*/I

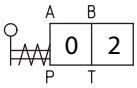

DH-008*/IA DK-108*/IA DH-018*/IA DK-118*/IA

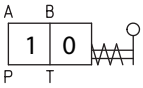

Spools

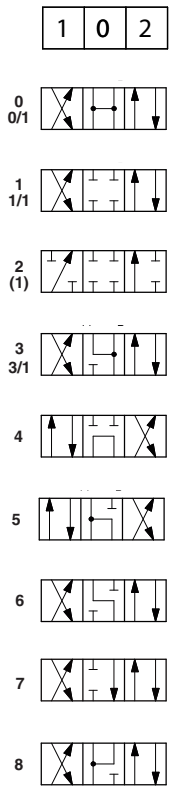

(1) Spool type 2 available only for DH

DP-20*, DP-21*, DP-40*, DP-41* - hand lever actuator

Configurations

DP-201* DP-401* DP-211* DP-411*

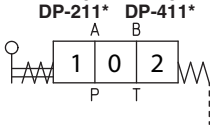

DP-201*/A DP-401*/A DP-211*/A DP-411*/A

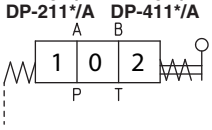

DP-203* DP-403* DP-213* DP-413*

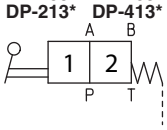

DP-203*/A DP-403*/A DP-213*/A DP-413*/A

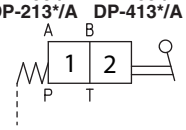

DP-204* DP-404* DP-214* DP-414*

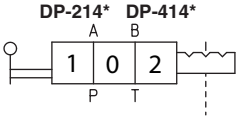

DP-204*/A DP-404*/A DP-214*/A DP-414*/A

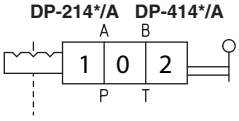

DP-205* DP-405* DP-215* DP-415*

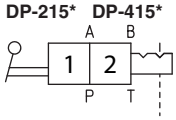

DP-205*/A DP-405*/A DP-215*/A DP-415*/A

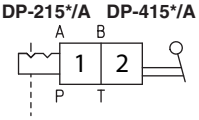

Spools

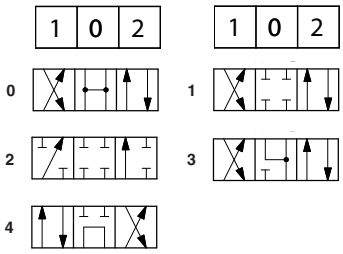

DH-02*, DK-12* - cam actuator

Configurations

DH-023* DK-123*

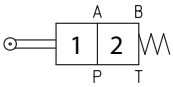

DH-023*/A DK-123*/A

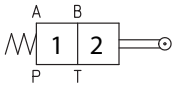

DH-027* DK-127*

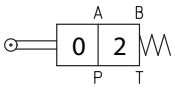

DH-027*/A DK-127*/A

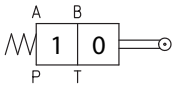

DH-028* DK-128*

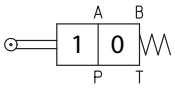

DH-028*/A DK-128*/A

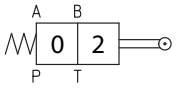

Spools

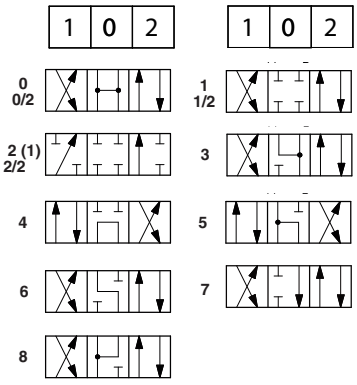

(1) Spool type 2 available only for DH

NOTE

- Spools type 0/2, 1/2, 2/2 are only used for valves type DH-023*/2 and DK 123*/2;

4 GENERAL CHARACTERISTICS

Assembly position		Any position except for configurtion 7 (without spring) that must be installed with horizontal axis
Subplate surface finishing to ISO 4401		Acceptable roughness index, Ra ≤0,8 recommended Ra 0,4 - flatness ratio 0,01/100
MTTFd valves according to EN ISO 13849		150 years, see technical table P007
Ambient temperature range		**Standard** = -30°C ÷ +70°C **/PE** option = -20°C ÷ +70°C
Storage temperature range		**Standard** = -30°C ÷ +80°C **/PE** option = -20°C ÷ +80°C
Flow direction		As shown in the symbols of tables 3
Compliance		RoHS Directive 2011/65/EU as last update by 2015/65/EU REACH Regulation (EC) n°1907/2006
Operating pressure	**DH**	P, A, B = **350 bar** T = **160 bar**
	DK	P, A, B = **315 bar** T = **160 bar**
	DP	P, A, B, X = **350 bar** T = **250 bar** for external drain (standard); Ports Y = 0 bar
Maximum flow	**DH**	**50 l/min**
	DK-10, DK-11 **DK-12**	**100 l/min** **140 l/min**
	DP-2 **DP-4**	**300 l/min** **700 l/min**

5 SEALS AND HYDRAULIC FLUIDS - For other fluids not included in above table, consult our technical office

Seals, recommended fluid temperature	NBR seals = (standard) -30°C ÷ +80°C, with HFC hydraulic fluids = -20°C ÷ +50°C FKM seals = (/PE option) -20°C ÷ +80°C		
Recommended viscosity	15÷100 mm²/s - max allowed range 15 ÷ 380 mm²/s		
Max fluid contamination level	ISO4406 class 20/18/15 NAS1638 class 9, see also filter section at www.atos.com or KTF catalog		
Hydraulic fluid	**Suitable seals type**	**Classification**	**Ref. Standard**
Mineral oils	NBR, FKM	HL, HLP, HLPD, HVLP, HVLPD	DIN 51524
Flame resistant without water	FKM	HFDU, HFDR	ISO 12922
Flame resistant with water	NBR	HFC	

6 Q/ΔP DIAGRAMS based on mineral oil ISO VG 46 at 50°C

DH-*

Spool type \ Flow direction	P→A	P→B	A→T	B→T	P→T
0, 0/1, 0/2	C	C	C	C	
1, 1/1, 1/2	A	A	A	A	
2, 2/2, 3, 3/1	A	A	C	C	
4, 5	D	D	D	D	A
6, 7	A	A	C	A	
8	C	C	B	B	

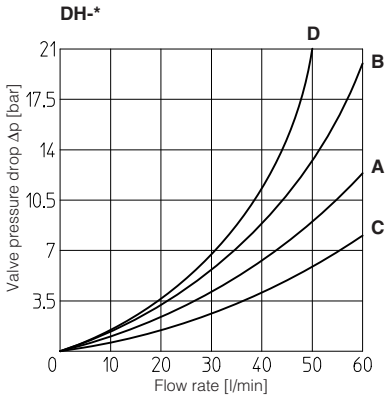

DK-*

Spool type \ Flow direction	P→A	P→B	A→T	B→T	P→T
0, 0/1, 0/2	A	A	B	B	
1, 1/1, 1/2, 6, 8	A	A	D	C	
3, 3/1, 7	A	A	C	D	
4	B	B	B	B	E
5	A	B	C	C	F

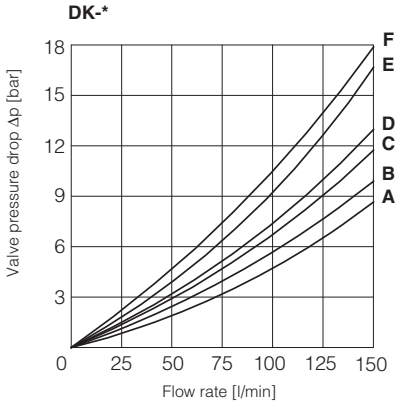

DP-2*

Spool type \ Flow direction	P→A	P→B	A→T	B→T	P→T
1, 3	A	A	C	A	-
0	A	A	C	D	B
2	A	A	-	-	-
4	B	B	F	G	E

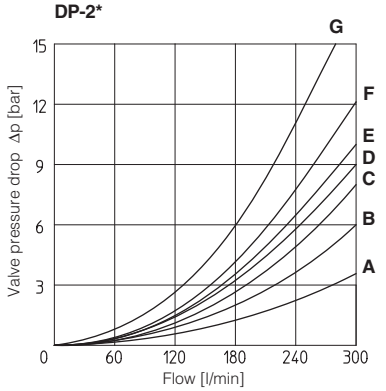

DP-4*

Spool type \ Flow direction	P→A	P→B	A→T	B→T	P→T
1	A	A	A	C	-
0	C	B	C	D	E
2	A	A	-	-	-
3	A	A	C	E	-
4	B	B	F	G	G

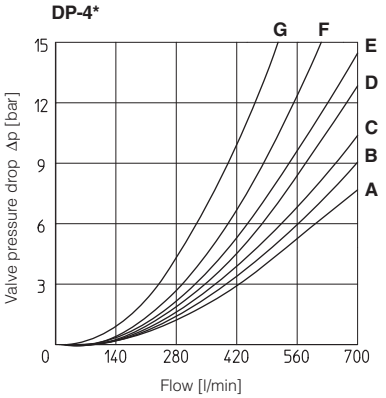

7 DIMENSIONS OF HAND & MECHANICAL OPERATED VALVES ISO 4401 SIZE 06 [mm]

DH-00**

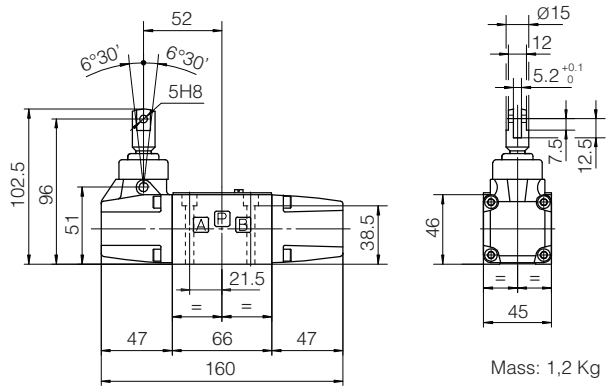

Mass: 1,2 Kg

DH-01**

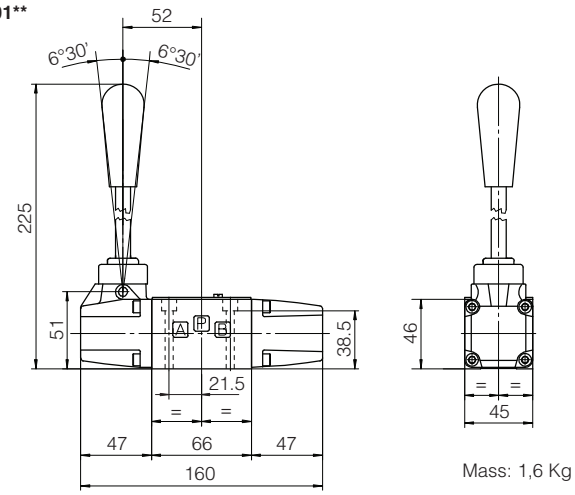

Mass: 1,6 Kg

DH-01/C**

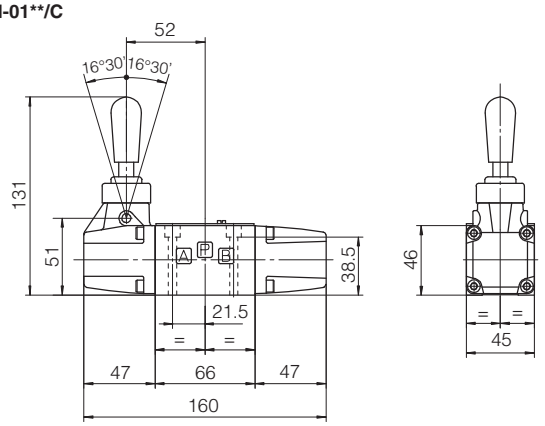

DH-02**

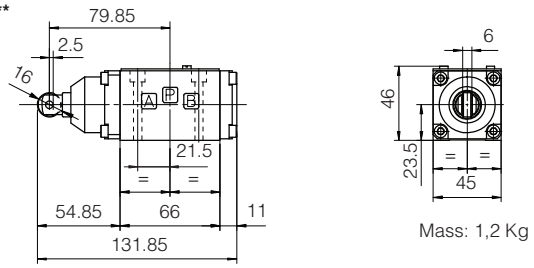

Mass: 1,2 Kg

Working stroke: 2,5 mm; extra-stroke: 0,5 mm max.

ISO 4401: 2005
Mounting surface: 4401-03-02-0-05 (see table P005)
Fastening bolts: 4 socket head screws M5x50 class 12.9
Tightening torque = 8 Nm
Diameter of ports A, B, P, T: Ø = 7,5 mm (max)
Seals: 4 OR 108

8 DIMENSIONS OF HAND & MECHANICAL OPERATED VALVES ISO 4401 SIZE 10 [mm]

DK-10**

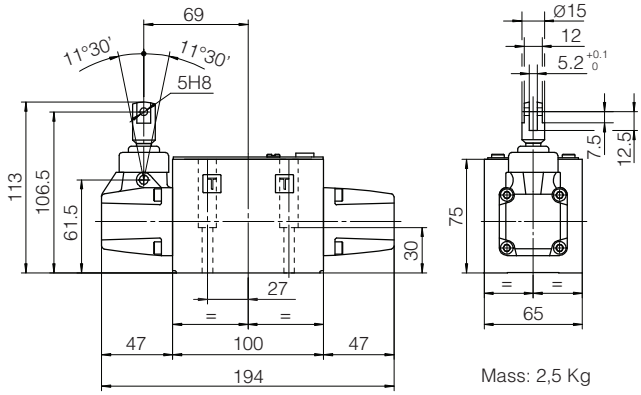

Mass: 2,5 Kg

DK-11**

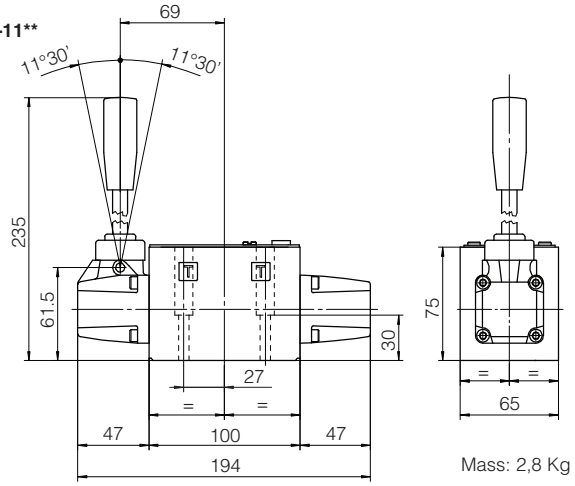

Mass: 2,8 Kg

DK-12**

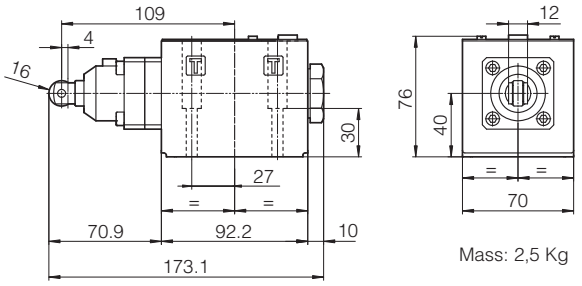

Mass: 2,5 Kg

Working stroke: 4 mm; extra-stroke: 0,5 mm max.

ISO 4401: 2005
Mounting surface: 4401-05-05-0-05 (see table P005)
(Without X port, Y port optional)
Fastening bolts: 4 socket head screws M6x40 class 12.9
Tightening torque = 15 Nm
Diameter of ports A, B, P, T: Ø = 11,2 mm (max)
Seals: 5 OR 2050

9 DIMENSIONS OF HAND & MECHANICAL OPERATED VALVES ISO 4401 SIZE 16 [mm]

DP-21

ISO 4401: 2005
Mounting surface: 4401-07-07-0-05 (see table P005)
Fastening bolts:
4 socket head screws M10x50 class 12.9, Tightening torque = 70 Nm
2 socket head screws M6x40 class 12.9, Tightening torque = 15 Nm
Diameter of ports A, B, P, T : Ø = 20 mm
Diameter of ports X,Y: Ø = 7 mm
Seals: 4 OR 130, 3 OR 109/70

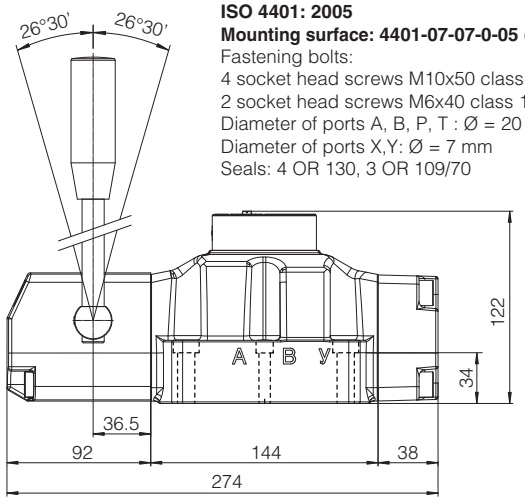

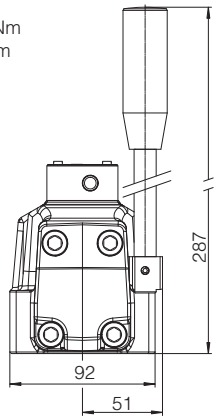

Mass: 10 Kg

DP-20

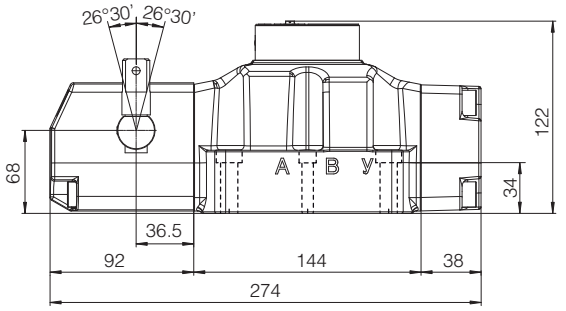

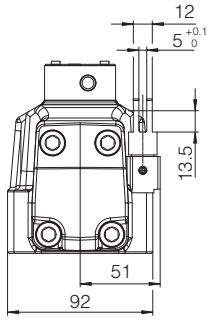

Mass: 9,7 Kg

10 DIMENSIONS OF HAND & MECHANICAL OPERATED VALVES ISO 4401 SIZE 25 [mm]

DP-41

ISO 4401: 2005
Mounting surface: 4401-08-08-0-05 (see table P005)
Fastening bolts:
6 socket head screws M12x60 class 12.9, Tightening torque = 125 Nm
Diameter of ports A, B, P, T : Ø = 24 mm
Diameter of ports X,Y: Ø = 7 mm
Seals: 4 OR 4112, 3 OR 3056

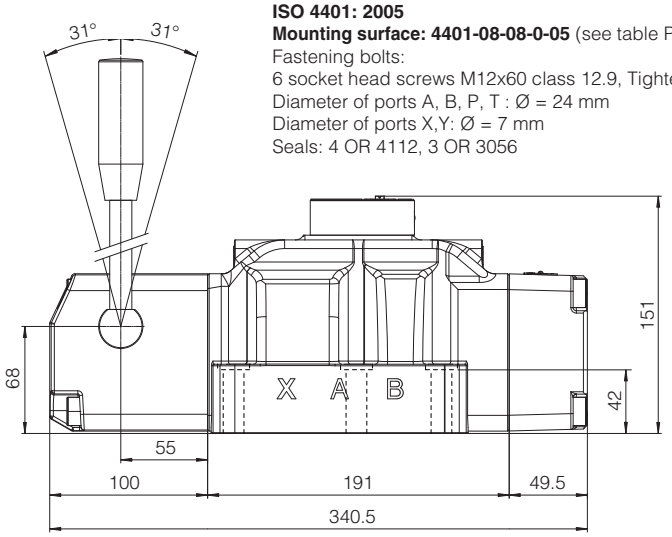

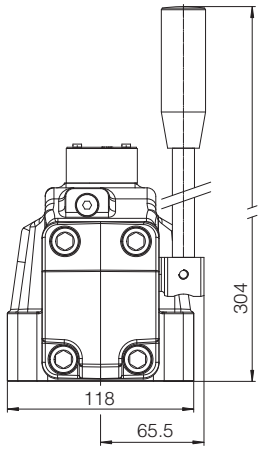

Mass: 15,5 Kg

DP-40

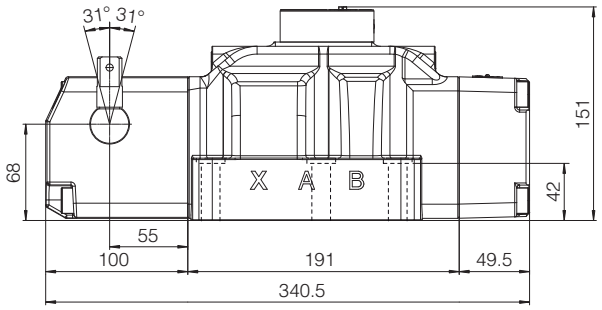

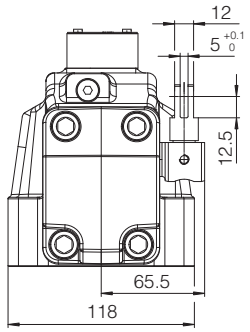

Mass: 15,2 Kg