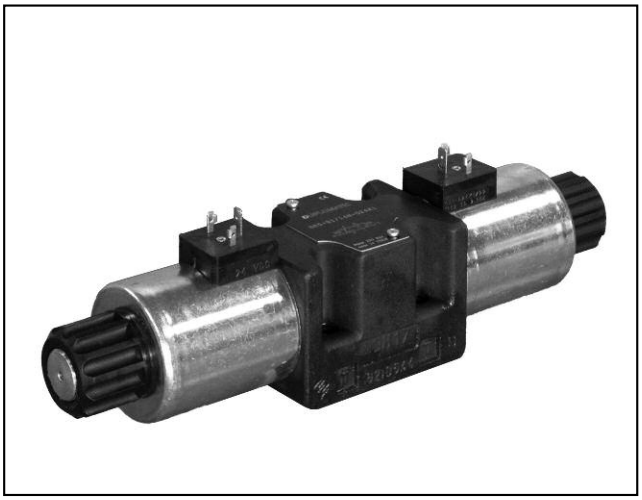

DS5

SOLENOID OPERATED DIRECTIONAL CONTROL VALVE

SUBPLATE MOUNTING ISO 4401-05

p max **320** bar
Q max **150** l/min

MOUNTING INTERFACE

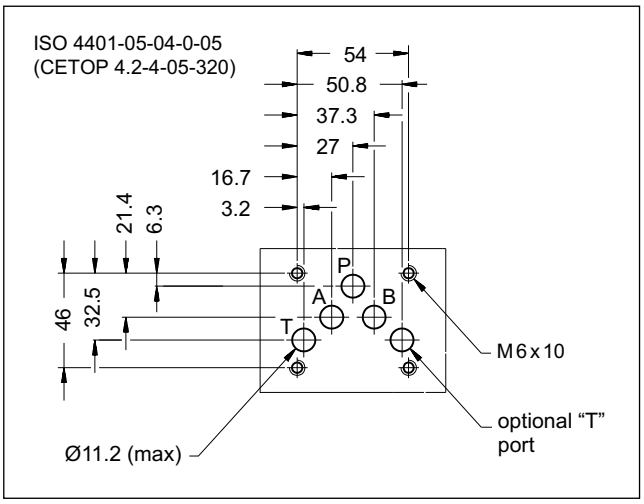

OPERATING PRINCIPLE

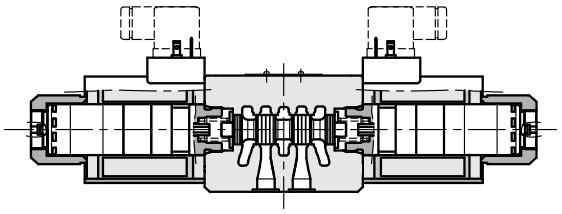

— Direct acting, subplate mounting directional control valve, with mounting surface according to ISO 4401.

— The valve is designed for 3 or 4 way and with several interchangeable spools, with different porting arrangements.

— The valve body is made with high strength iron castings provided with wide internal passages, in order to minimize the flow pressure drop. Wet armature solenoids with interchangeable coils are used (see paragraph 7).

— The valve is available with DC or AC solenoids. DC solenoids can also be fed with AC power supply, by using connectors with a built-in rectifier bridge (see paragraph 7.2).

— The DS5 direct current version is available in the following special versions:

- with Y external subplate drain port, (see par. 13.1 and 13.2).
- with soft-shifting (see par. 13.3 and 13.4)
- with adjustable "soft-shift" device (see paragraph 13.5)

PERFORMANCES

(with mineral oil of viscosity of 36 cSt at 50°C)

		DC	AC
Maximum operating pressure P - A - B ports T port - standard version T port - version with Y port (ext.drain)	bar	320 210 320	140 -
Maximum flow rate	l/min	150	120
Pressure drops Δp-Q		see paragraph 4	
Operating limits		see paragraph 6	
Electrical features		see paragraph 7	
Electrical connections		see paragraph 11	
Ambient temperature range	°C	-20 / +50	
Fluid temperature range	°C	-20 / +80	
Fluid viscosity range	cSt	10 ÷ 400	
Fluid contamination degree		according to ISO 4406:1999 class 20/18/15	
Recommended viscosity	cSt	25	
Mass: single solenoid valve double solenoid valve	kg	4.5 6.1	3.6 4.3

1 - IDENTIFICATION CODE

D	S	5	-		/			-			/		

Solenoid operated directional control valve

ISO 4401-05 size

Spool type
(see par. 3)

S*	**TA**
SA*	**TB**
SB*	**RK**

Series:
(the overall and mounting dimensions remain unchanged from 10 to 19)
14 = for DC valves type D*K1 and D12K7
DC valves without coils D00
12 = for AC valves
DC valves D24K7

Seals:
N = NBR seals for mineral oil (**standard**)
V = FPM seals for special fluids

DC power supply
D12 = 12 V
D24 = 24 V
D26 = 26.4 V
D110 = 110 V
D220 = 220 V
D00 = valve without coils (see **NOTE 1**)

AC power supply
A24 = 24 V - 50 Hz.
Not available for S4, SA4, SB4, S7 and S8 spools
A48 = 48 V - 50 Hz
A110 = 110 V - 50 Hz / 120 V - 60 Hz
A230 = 230 V - 50 Hz / 240 V - 60 Hz
A00 = valve without coils (see **NOTE 1**)
F110 = 110 V - 60 Hz
F220 = 220 V - 60 Hz

Option: Surface treatment not standard.
Not available for AC valves.
Omit if not required.
(see **NOTE 2**)

Manual override:
omit for override integrated in the tube (**standard**)
CM = manual override, boot protected (only for DC version)
CK = knob manual override (only for DC version)
CK2 = push and twist knob override (only for DC version)

Coil electrical connection (see par. 11):
K1 = plug for connector type EN 175301-803 (ex DIN 43650) (**standard**)
Only for **D12** and **D24**:
K7 = plug DEUTSCH DT04-2P for male connector type DEUTSCH DT06-2S

NOTE 1: Coils locking ring and related OR are supplied together with valves.

NOTE 2:The standard surface treatment is phosphating black.

On request we can supply these valves with zinc-nickel finishing, making the valve suitable to ensure a salt spray resistance up to 240 hours (test operated according to UNI EN ISO 9227 standard and test evaluation operated according to UNI EN ISO 10289 standard)

Add **/W7** at the end of the identification code.

2 - HYDRAULIC FLUIDS

Use mineral oil-based hydraulic fluids HL or HM type, according to ISO 6743-4. For these fluids, use NBR seals (code N). For fluids HFDR type (phosphate esters) use FPM seals (code V). For the use of other fluid types such as HFA, HFB, HFC, please consult our technical department.

Using fluids at temperatures higher than 80 °C causes a faster degradation of the fluid and of the seals characteristics. The fluid must be preserved in its physical and chemical characteristics.

3 - SPOOL TYPE

Type **S***:
2 solenoids - 3 positions
with spring centering

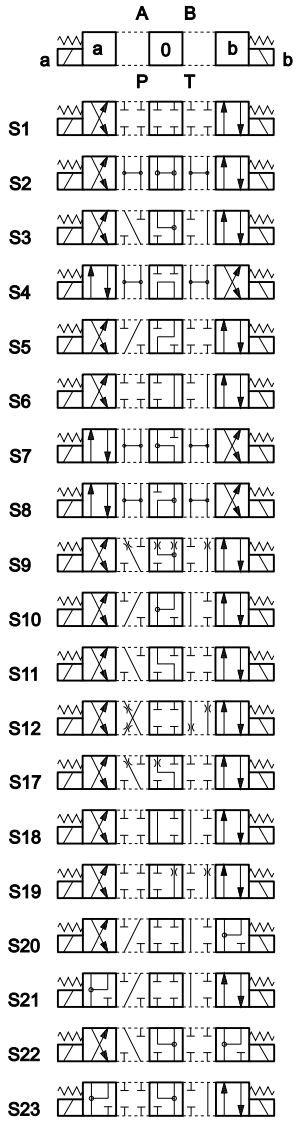

Type **SA***:
1 solenoid side A
2 positions (central + external)
with spring centering

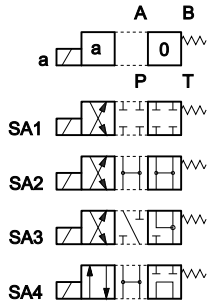

Type **SB***:
1 solenoid side B
2 positions (central + external)
with spring centering

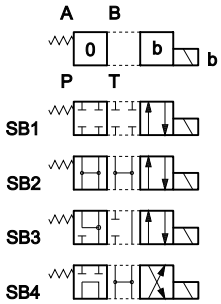

Type **TA**:
1 solenoid side A
2 external positions
with return spring

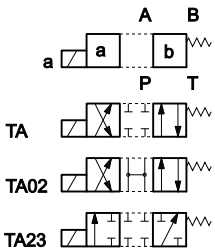

Type **TB**:
1 solenoid side B
2 external positions
with return spring

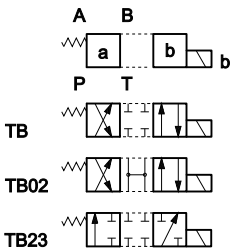

Type **RK**:
2 solenoids - 2 positions
with mechanical retention

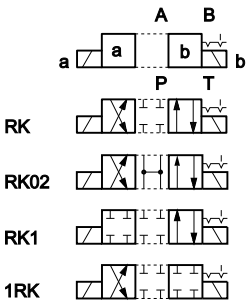

Besides the diagrams shown, which are the most frequently used, other special versions are available: consult our technical department for their identification, feasibility and operating limits.

4 - PRESSURE DROPS Δp-Q

(obtained with viscosity 36 cSt at 50 °C)

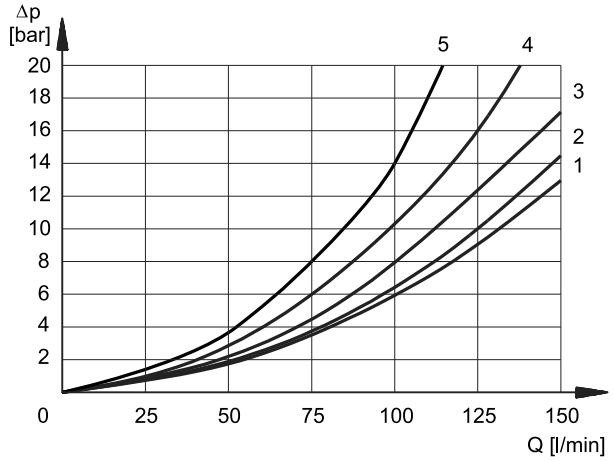

ENERGIZED POSITION

SPOOL TYPE	FLOW DIRECTION			
	P-A	P-B	A-T	B-T
	CURVES ON GRAPH			
S1, SA1, SB1	2	2	1	1
S2, SA2, SB2	3	3	1	1
S3, SA3, SB3	3	3	2	2
S4, SA4, SB4	1	1	2	2
S5	2	1	1	1
S6, S11	3	3	2	2
S7, S8	1	1	2	2
S9	3	3	2	2
S10	1	1	3	3
S12	2	2	1	1
S17, S19	2	2	1	1
S18	1	2	1	1
S20, S22	2	4	4	-
S21, S23	4	2	-	4
TA, TB	3	3	2	2
TA02, TB02	3	3	2	2
TA23, TB23	4	4		
RK	3	3	2	2
RK02	3	3	2	2
RK1, 1RK	3	3	2	2

For pressure drops between A and B lines of S10, S20, S21, S22 spools which are used in the regenerative diagram, refer to curve 5.

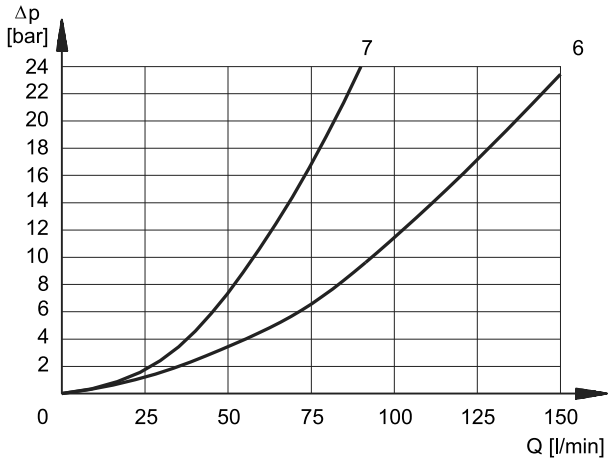

DE-ENERGIZED POSITION

SPOOL TYPE	FLOW DIRECTION				
	P-A	P-B	A-T	B-T	P-T
	CURVES ON GRAPH				
S2, SA2, SB2					6
S3, SA3, SB3			7	7	
S4, SA4, SB4					6
S5		3			
S6				7	
S7					6
S8					6
S10	3	3			
S11			7		
S18	3				
S22			7	7	

5 - SWITCHING TIMES

The values indicated are obtained according to ISO 6403 standard, with mineral oil viscosity 36 cSt at 50°C.

COIL TYPE	TIMES [ms]	
	ENERGIZING	-ENERGIZING
DC	100 ÷ 150 ms	20 ÷ 50 ms
AC	15 ÷ 30 ms	20 ÷ 50 ms

6 - OPERATING LIMITS

The curves define the flow rate operating fields according to the valve pressure of the different versions.

The values have been obtained according to ISO 6403 norm with solenoids at rated temperature and supplied with voltage equal to 90% of the nominal voltage.

The values have been obtained with mineral oil, viscosity 36 cSt, temperature 50 °C and filtration according to ISO 4406:1999 class 18/16/13 and are relevant to the standard solenoid valve.

The operating limits can be considerably reduced if a 4-way valve is used as 3-way valve with port A or B plugged or without flow.

For flow and pressure performances of soft-shifting configuration (options F) see par. 13.4.

Flow and pressure performances of adjustable soft-shifting device configurations (options S, par. 13.5) are influenced by the set shifting time.

DC SOLENOID VALVE

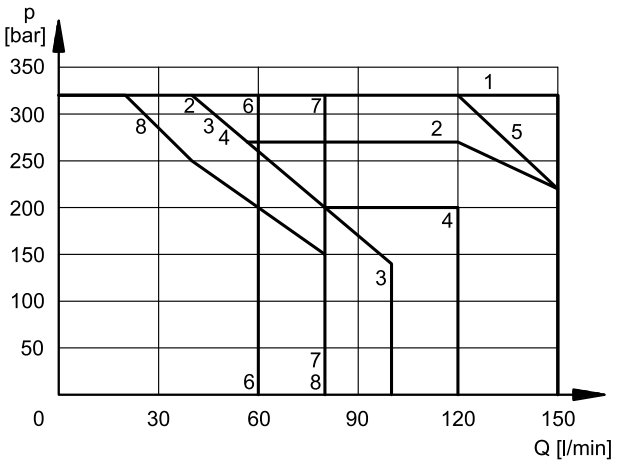

SPOOL	CURVE	
	P→A	P→B
S1, SA1, SB1	1	1
S2, SA2, SB2	1	1
S3, SA3, SB3	2	2
S4, SA4, SB4	3	3
S5	1	1
S6	2	1
S7	3	3
S8	3	3
S9	1	1
S10	3	3
S11	1	2
S12	1	1

SPOOL	CURVE	
	P→A	P→B
S17	1	4
S18	1	1
S19	4	1
S20	8*	7
S21	7	8*
S22	6*	6
S23	6	6*
TA, TB	5	5
TA02, TB02	4	4
TA23, TB23	1	1
RK	1	1
RK02	1	1
RK1, 1RK	1	1

* Performance obtained for a valve with A and B lines connected the one to the piston-side chamber and the other to the rod-side chamber of a double-acting cylinder with area ratio 2:1.

26AC SOLENOID VALVE

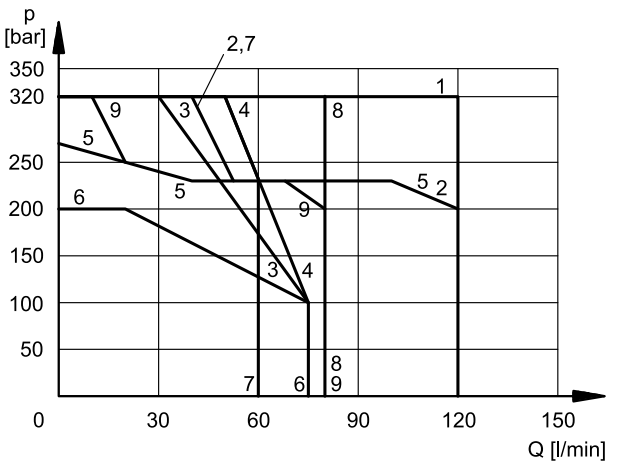

SPOOL	CURVE	
	P→A	P→B
S1, SA1, SB1	1	1
S2, SA2, SB2	2	2
S3, SA3, SB3	2	2
S4, SA4, SB4	4	4
S5	1	1
S6	2	1
S7	3	3
S8	3	3
S9	2	2
S10	1	1
S11	1	2
S12	1	1

SPOOL	CURVE	
	P→A	P→B
S17	1	5
S18	1	1
S19	5	1
S20	9*	8
S21	8	9
S22	7	7
S23	7	7
TA, TB	1	1
TA02, TB02	5	5
TA23, TB23	1	1
RK	1	1
RK02	1	1
RK1, 1RK	1	1

7 - ELECTRICAL FEATURES

7.1 - Solenoids

These are essentially made up of two parts: tube and coil. The tube is threaded into the valve body and includes the armature that moves immersed in oil, without wear. The inner part, in contact with the oil in the return line, ensures heat dissipation.

The coil is fastened to the tube by a threaded ring, and can be rotated, to suit the available space.

Protection from atmospheric agents IEC 60529

he IP protection degree is guaranteed only with both valve and connectors of an equivalent IP degree, correctly connected and installed.

connection type	electric connection protection	whole valve protection
K1 EN 175301-803	IP65	IP65
K7 DEUTSCH DT04 male	IP65/IP67/IP69 IP69K (*)	

(*) The IP69K protection degree is not taken into account in IEC 60529 but it is included in ISO 20653.

VOLTAGE SUPPLY FLUCTUATION	± 10% Vnom
MAX SWITCH ON FREQUENCY	15.000 ins/hr
DUTY CYCLE	100%
ELECTROMAGNETIC COMPATIBILITY (EMC) (**NOTE 1**)	In compliance with 2014/30/EU
LOW VOLTAGE	In compliance with 2014/35/EU
CLASS OF PROTECTION Coil insulation (VDE 0580) Impregnation	 class H class F

NOTE 1: In order to further reduce the emissions, use of type H connectors is recommended. These prevent voltage peaks on opening of the coil supply electrical circuit (see catalogue 49 000).

7.2 - Current and absorbed power for DC solenoid valve

The table shows current and power consumption values relevant to the coil types for DC.

Using connectors type "D" (see cat. 49 000) with embedded bridge rectifier it is possible to feed DC coils (starting from 110V voltage) with alternating current (50 or 60 Hz).

However, when supplying the valve with rectified current, it is necessary to consider a reduction of the operating limits by 15-20% approx.

Coils for direct current (values ± 5%)

Suffix	Nominal voltage [V]	Resistance at 20°C [Ω]	Current consumpt. [A]	Power consumpt. [W]	Coil code K1	Coil code K7
D12	12	3	4	48	1903550	1903620
D24	24	12	2	48	1903551	1903221
D26	26.4	14.5	1.82	48	1903559	
D110	110	250	0.44	48	1903554	
D220	220	1010	0.22	48	1903555	

7.3 - Current and absorbed power for AC solenoid valve

The table shows current and power consumption values at inrush and at holding, relevant to the different coil types for AC current.

Coils for alternating current (values ± 5%)

Suffix	Nominal voltage [V]	Frequency [Hz]	Resistance at 20°C [ohm]	Current consumption at inrush [A]	Current consumption at holding [A]	Power consumption at inrush [VA]	Power consumption at holding [VA]	Coil code
A24	24	50	0.53	25	3.96	600	95	1902890
A48	48		2.09	12.5	2.3	600	110	1902891
A110	110V-50Hz	50/60	10.9	5.2	0.96	572	105	1902892
	120V-60Hz		10.9	5.2	0.89	572	105	
A230	230V-50Hz		52.7	2.8	0.46	644	105	1902893
	240V-60Hz		52.7	2.8	0.38	644	105	
F110	110	60	8.80	5.2	0.95	572	105	1902894
F220	220		35.2	2.7	0.48	594	105	1902895

8 - OVERALL AND MOUNTING DIMENSIONS FOR DC SOLENOID VALVES

dimensions in mm

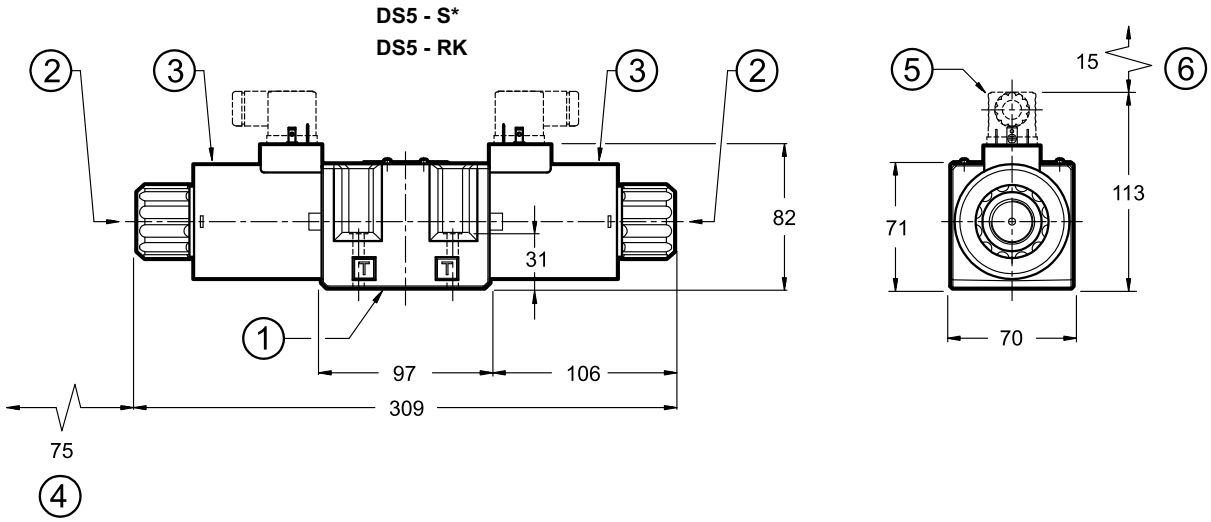

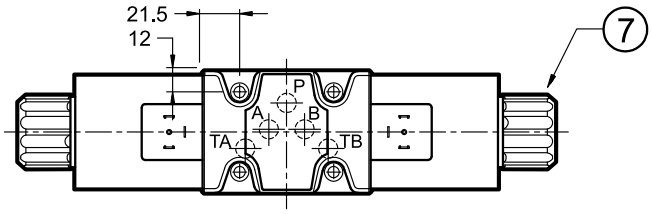

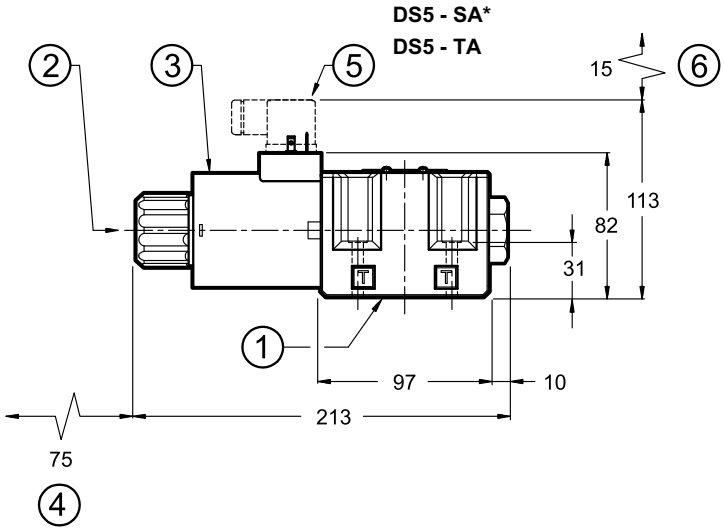

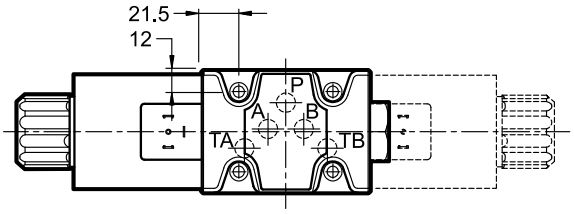

1	Mounting surface with sealing rings: 5 OR type 2050 (12.42x1.78) - 90 Shore Additional for Y version only: 1 OR 2037 (9.25x1.78) - 90 shore
2	Standard manual override included in the solenoid tube
3	Coil (360° revolving)
4	Coil removal space
5	EN 175301-803 (ex DIN 43650) connector (standard K1 shown) to be ordered separately (see cat. 49 000)
6	Connector removal space
7	Locking ring: tightening torque: 6 Nm

Valve fastening: 4 SHC screws ISO 4762 M6x40
Tightening torque: 8 Nm (screws A8.8)
Threads of mounting holes: M6x10

9 - OVERALL AND MOUNTING DIMENSIONS FOR AC SOLENOID VALVES

dimensions in mm

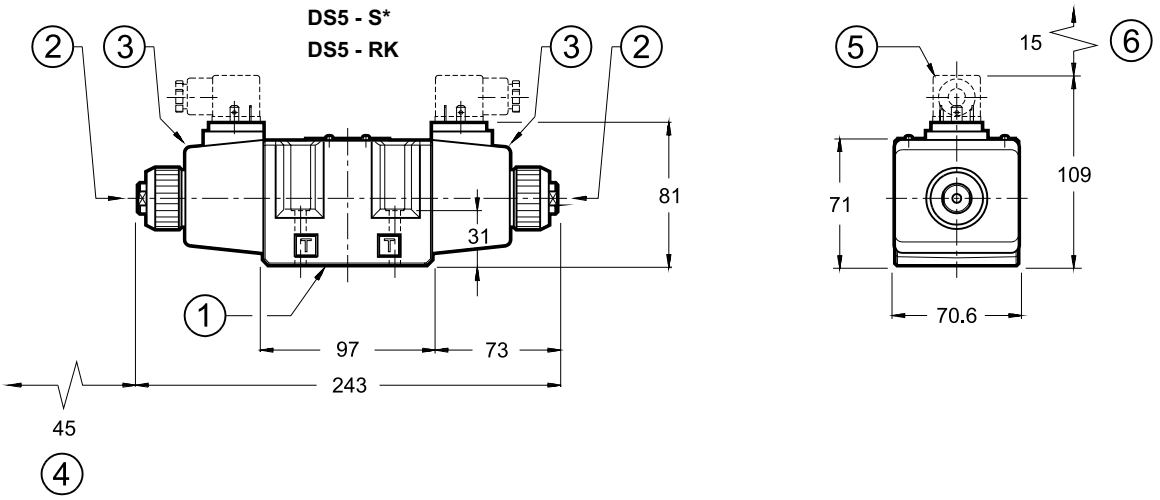

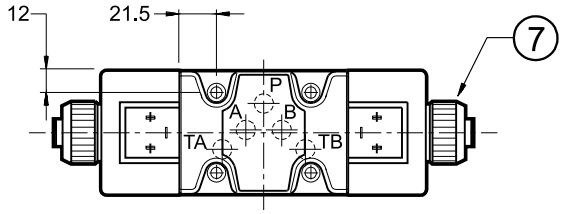

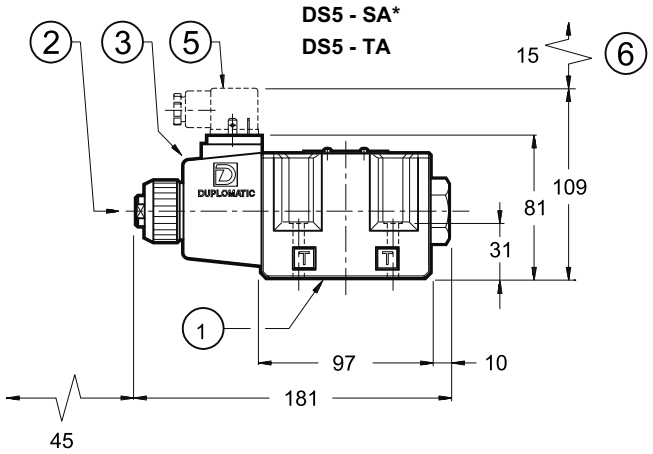

solenoid position for SB* and TB configurations

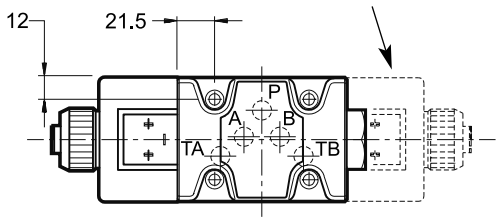

1	Mounting surface with sealing rings: 5 OR type 2050 (12.42x1.78) - 90 Shore
2	Standard manual override included in the solenoid tube
3	Coil (360° revolving)
4	Coil removal space
5	EN 175301-803 (ex DIN 43650) connector to be ordered separately (see cat. 49 000)
6	Connector removal space
7	Locking ring: tightening torque: 4.5 - 5 Nm

Valve fastening: 4 SHC screws ISO 4762 M6x40
Tightening torque: 8 Nm (screws A8.8)
Threads of mounting holes: M6x10

10 - INSTALLATION

Configurations with centering and return springs can be mounted in any position; type RK valves - without springs and with mechanical detent - must be mounted with the longitudinal axis horizontal. Valve fixing is by means of screws or tie rods, with the valve mounted on a lapped surface, with values of planarity and smoothness that are equal to or better than those indicated in the drawing.

If the minimum values of planarity and/or smoothness are not met, fluid leakage between valve and mounting surface can easily occur.

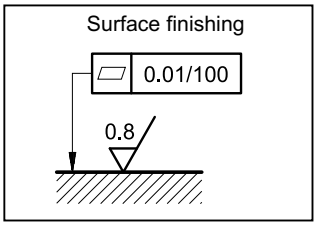

11 - ELECTRIC CONNECTIONS

connection for EN 175301-803 (ex DIN 43650)
connector type
code **K1** (**standard**)

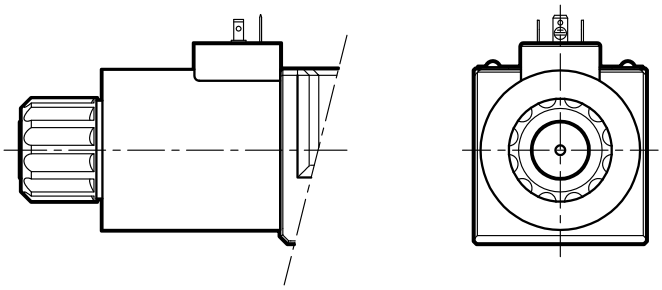

connection for
DEUTSCH DT06-2S male connector type
code **K7**

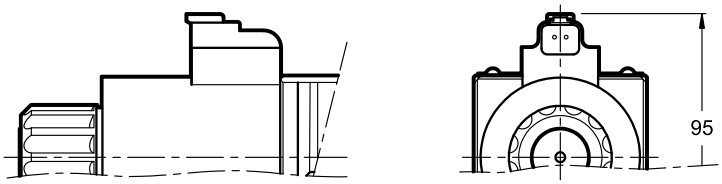

12 - ELECTRIC CONNECTORS

Solenoid operated valves are delivered without connectors. Connectors type EN 175301-803 (ex DIN 43650) for K1 connections can be ordered separately. See catalogue 49 000.

13 - SPECIAL VERSIONS FOR DC SOLENOID VALVE

13.1 - Identification code for external drain version

D	S	5	-		/	14		-		K1	/	Y	/		

Solenoid operated directional control valve

ISO 4401-05 size

Spool type (see par. 3)

Series n.:
(the overall and mounting dimensions remain unchanged from 10 to 19)

Seals:
N = NBR seals for mineral oil (**standard**)
V = FPM seals for special fluids

Coil type

D12 = 12 V
D24 = 24 V
D26 = 26.4 V
D110 = 110 V
D220 = 220 V

Coil electrical connection (see par. 11):
K1 = plug for connector type EN 175301-803 (ex DIN 43650) (**standard**)
Only for **D12** and **D24**:
K7 = plug DEUTSCH DT04-2P for male connector type DEUTSCH DT06-2S

Port for subplate external drain

Manual override:
omit for override integrated in the tube (**standard**)
CM = manual override, boot protected
CK = knob manual override
CK2 = push and twist knob override

Option: Surface treatment not standard. Omit if not required (see **NOTE**)

NOTE :The standard surface treatment is phosphating black.

On request we can supply these valves with zinc-nickel finishing, making the valve suitable to ensure a salt spray resistance up to 240 hours (test operated according to UNI EN ISO 9227 standard and test evaluation operated according to UNI EN ISO 10289 standard)

Add **/W7** at the end of the identification code.

13.2 - Subplate external drain port (option Y)

This version allows the operation with pressures up to 320 bar on the valve T port.

It is a drain port Y realized on the valve mounting interface in compliance with ISO 4401-05-05-0-05. The Y port is connected with the solenoid chamber: in this way the tubes are not stressed by the pressure operating on the valve T port.

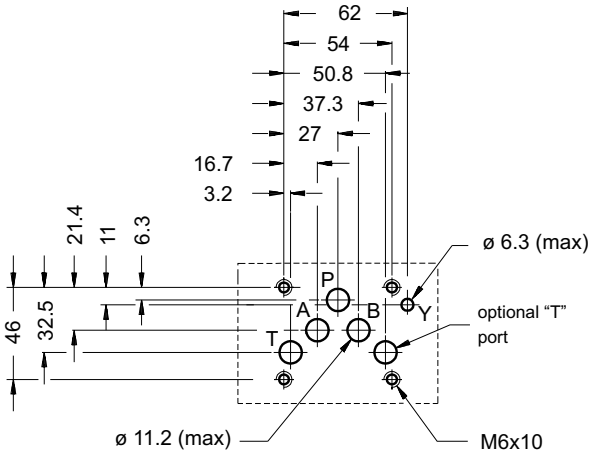

13.3 - Identification code for soft-shifting versions

D S 5 - _ / 14 _ - _ K1 / _ / _

Solenoid operated directional control valve

ISO 4401-05 size

Spool type (see par. 3)

S1	**S4**	**TA**
S2	**S7**	**TB**
S9	**S8**	**TA02**
S12		**TB02**

Series n.:
(the overall and mounting dimensions remain unchanged from 10 to 19)

Seals:
N = NBR seals for mineral oil (**standard**)
V = FPM seals for special fluids

Coil type
D12 = 12 V
D24 = 24 V
D26 = 26.4 V
D110 = 110 V
D220 = 220 V

Manual override:
omit for override integrated in the tube (**standard**)
CM = manual override, boot protected
CK = knob manual override
CK2 = push and twist knob override

Options:
F = soft-shifting (see par. 13.4)
S = adjustable soft-shifting device (see par 13.5)

Coil electrical connection (see par. 11):
K1 = plug for connector type EN 175301-803 (ex DIN 43650) (**standard**)
Only for **D12** and **D24**:
K7 = plug DEUTSCH DT04-2P for male connector type DEUTSCH DT06-2S

13.4 - Fixed restrictor for soft-shifting (option F)

This version enables hydraulic actuators to perform a smooth start and stop, by reducing the speed of movement of the valve spool.

The diagram below shows the operating limits for available spools in the soft-shifting version (**NOTE**: for this version, the S9 spool must be used instead of the S3 one). The table on the side shows the switching times. Indicated values are obtained according to ISO 6403 standard, with mineral oil viscosity 36 cSt at 50°C.

Both shifting time and characteristics curves are influenced by the viscosity (and thus by the temperature) of the operating fluid. Moreover, times can vary according to the flow rate and operating pressure values of the valve.

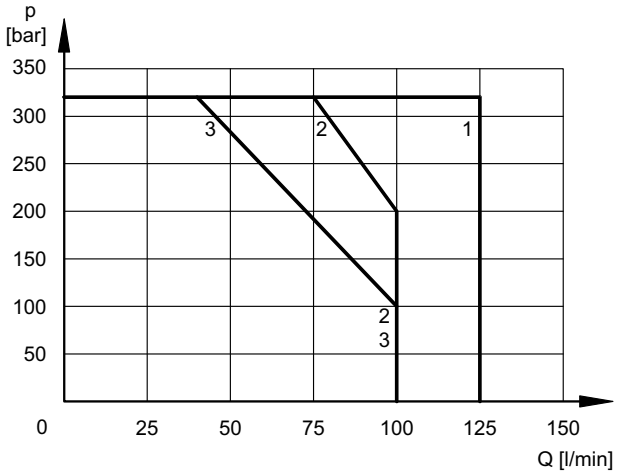

SPOOL TYPE	CURVE		TIMES	
	P-A	P-B	ENERGIZING	DE-ENERGIZING
S1, S12	1	1	300 ÷ 500	300 ÷ 500
S2	2	2	450	200 ÷ 300
S4, S7, S8	3	3	400	400 ÷ 200
S9	1	1	300 ÷ 500	300 ÷ 500
TA, TB	2	2	300 ÷ 400	300 ÷ 400
TA02, TB02	2	2	400	200 ÷ 300

13.5 - Directional solenoid valve with adjustable “soft-shifting” device (option S)

This solenoid valve is supplied with a suitable device, adjustable by the user, which enables the control of the valve spool shifting time.

In this way the hydraulic actuators can perform smooth movements, by controlling the valve switching time according to the machine cycle and the inertia of the moving parts.

NOTE: during the first start-up the valve body must be filled with the operating fluid through the tap (1) .

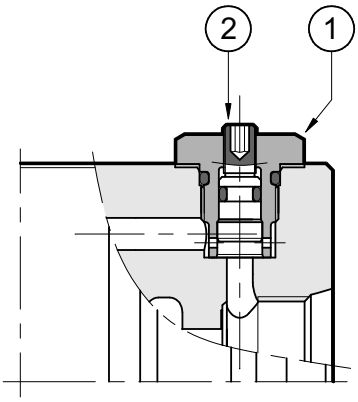

1	Spanner for plug: 17 mm - tightening torque 20 Nm
2	Socket hex adjustment screw for shifting time: spanner 2.5 mm

14 - MANUAL OVERRIDES FOR DC SOLENOID VALVES

14.1 - CM - Manual override, boot protected

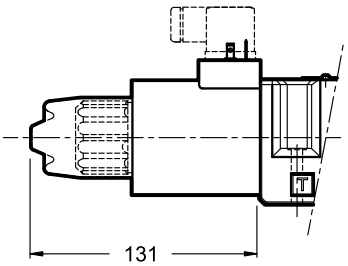

Code: valves in series 12 = 0239050
valves in series 14 = 0239051

14.2 - CK - Turning knob

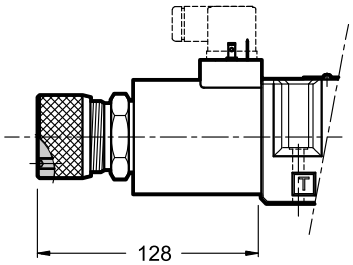

When the set screw is screwed and its point is aligned with the edge of the knob, tighten the knob till it touches the spool: in this position the override is not engaged and the valve is de-energized. After adjusting the override, tighten the set screw in order to avoid the knob loosing.

Spanner: 3 mm

Code: 3803260003

14.3 - CK2 - Push and twist

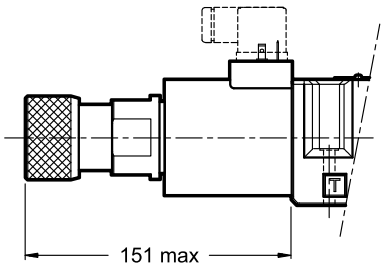

Code: 3401310001

15 - SPARE PARTS FOR DC SOLENOID VALVE

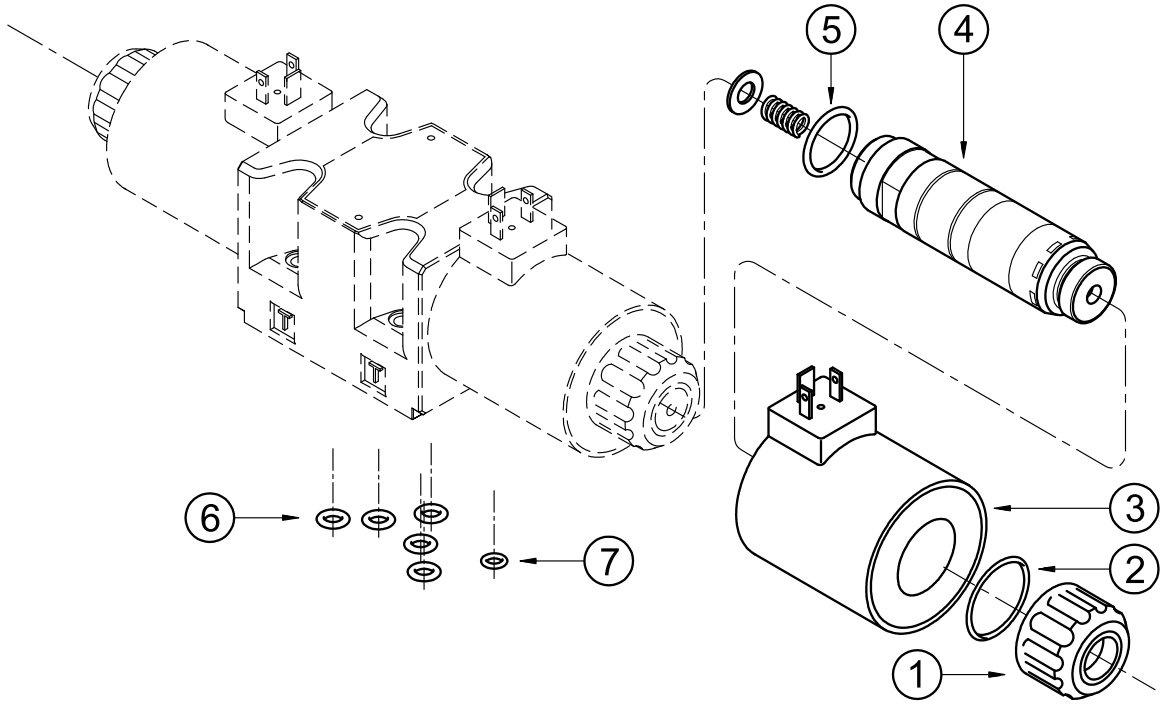

DC COILS IDENTIFICATION CODE

C	31	-			/	

Supply voltage

D12 = 12 V
D24 = 24 V
D26 = 26.4 V
D110 = 110 V
D220 = 220 V

Series no.:
22 = for K1 and D12K7 coils
21 = for D24K7 coils

Coil electrical connection
K1 = plug for connector type EN 175301-803 (ex DIN 43650) (**standard**)
Only for **D12** and **D24**:
K7 = plug DEUTSCH DT04-2P for male connector type DEUTSCH DT06-2S

1	Coil locking ring with seal included cod. 0119383 tightening torque: 6 Nm
2	ORM type 0320 - 25 (32x2.5) - 70 Shore
3	Coil (see identification code)
4	Solenoid tube TD31-M27/20N (NBR seals) TD31-M27/20V (FPM seals) **NOTE**: OR n° 5 supplied with.
5	OR type 3-912 (23.47x2.95) - 70 Shore
6	N. 5 OR type 2050 (12.42x1.78) - 90 Shore
7	For version with external subplate drain only (Y option): OR type 2037 (9.25x1.78) - 90 Shore

SEALS KIT

The codes here below include O-Rings ref. 2, 5, 6 and 7.

Cod. 1984418 NBR seals
Cod. 1984419 FPM (viton) seals

16 - SPARE PARTS FOR AC SOLENOID VALVE

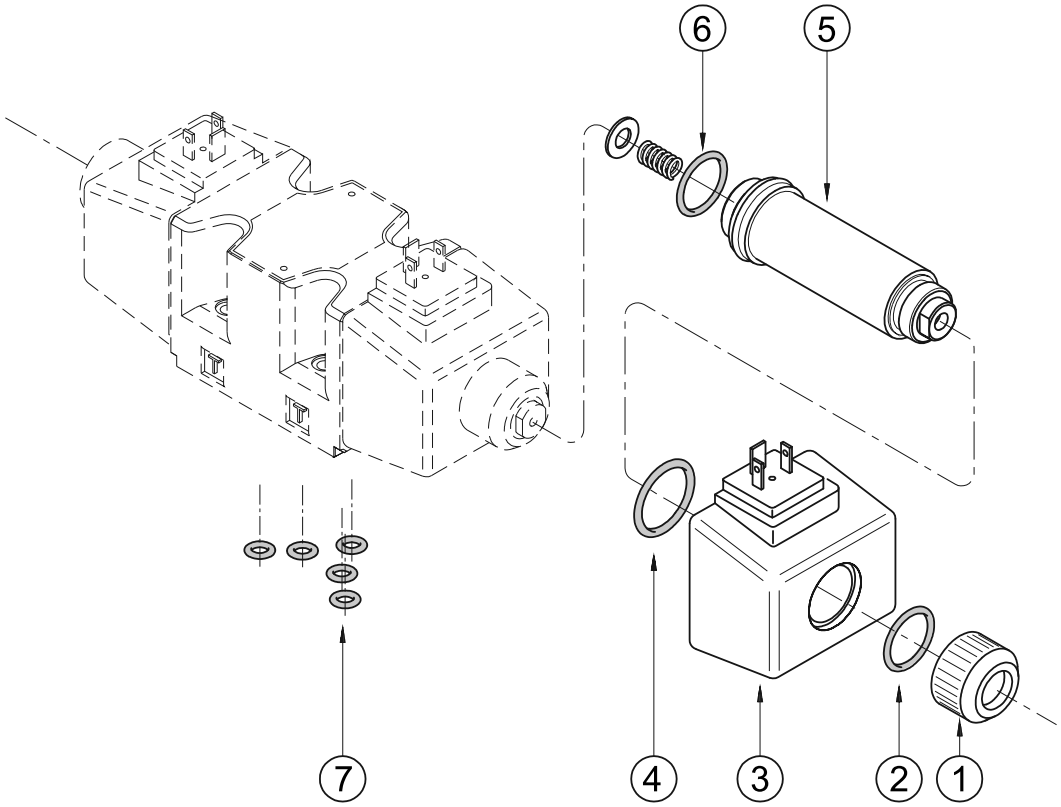

AC COILS IDENTIFICATION CODE

C	25.4	-		K1	/	11

Supply voltage

A24 = 24 V - 50 Hz
A48 = 48 V - 50 Hz
A110 = 110 V - 50 Hz
120 V - 60 Hz
A230 = 230 V - 50 Hz
240 V - 60 Hz
F110 = 110 V - 60 Hz
F220 = 220 V - 60 Hz

Plug for connector type
EN 175301-803
(ex DIN 43650)

Series no.:
(the overall and mounting dimensions remain unchanged from 10 to 19)

SEALS KIT

The codes here below include O-Rings ref. 2, 4, 6 and 7.

Cod. 1984420 NBR seals
Cod. 1984421 FPM (viton) seals

1	Coil locking ring cod. 0119402 tightening torque: 4.5 - 5 Nm
2	OR type 4100 (24.99x3.53) - 70 Shore
3	Coil (see identification code)
4	OR type 2112 (28.30x1.78) - 70 Shore
5	Solenoid tubes: TA25.4-M27/11N (NBR seals) TA25.4-M27/11V (FPM seals) **NOTE**: OR n° 6 supplied with.
6	OR type 3-912 (23.47x2.95) - 70 Shore
7	N. 5 OR type 2050 (12.42x1.78) - 90 Shore

17 - SUBPLATES

(see catalogue 51 000)

Type PMD4-AI4G with rear ports 1/2” BSP
Type PMD4-AL4G with side ports 1/2” BSP