PRE3G*

PILOT OPERATED PRESSURE CONTROL VALVE WITH PROPORTIONAL CONTROL AND INTEGRAL ELECTRONICS

SUBPLATE MOUNTING ISO 4401-03

p max **350** bar
Q max **40** l/min

MOUNTING INTERFACE

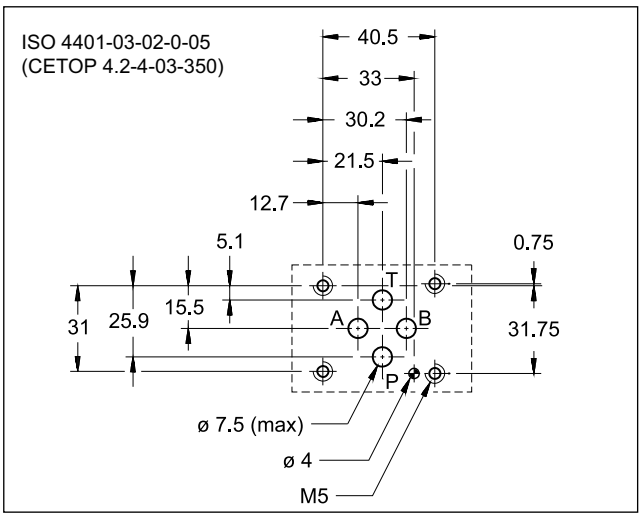

OPERATING PRINCIPLE

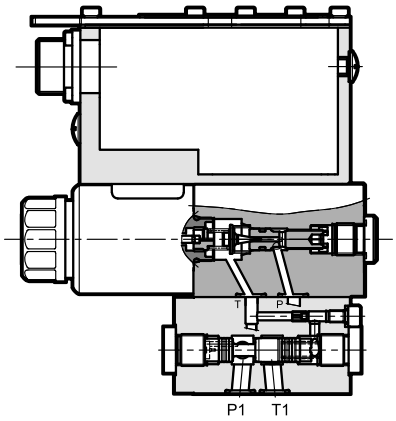

— The PRE3G* valve is a pilot operated pressure control valve with electric proportional control and mounting surface in compliance with ISO 4401 standards, controlled by an integral digital amplifier.

— It is suitable to modulate the pressure in hydraulic circuits.

— It is available with different types of electronics, with analogue or fieldbus interfaces.

— Valves are easy to install. The driver directly manages digital settings.

PERFORMANCES

(obtained with mineral oil with viscosity of 36 cSt at 50°C and p = 140 bar)

Maximum operating pressure: - P port - T port	bar	350 2
Minimum controlled pressure	see p min= f(Q) diagram	
Minimum flow Maximum flow (see p max = f(Q) diagram)	l/min	2 40
Step response	see paragraph 7	
Hysteresis	% of p nom	< 3%
Repeatability	% of p nom	< ±1%
Electrical characteristic	see paragraph 2	
Ambient temperature range	°C	-20 / +60
Fluid temperature range	°C	-20 / +80
Fluid viscosity range	cSt	10 ÷ 400
Fluid contamination degree	According to ISO 4406:1999 class 18/16/13	
Recommended viscosity	cSt	25
Mass	kg	3.8

HYDRAULIC SYMBOL

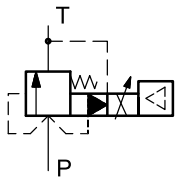

1 - IDENTIFICATION CODE

1.1 - Standard electronics

P	R	E	3	G	-		/	32		-		K11	

Pressure control valve

Electrical proportional control

Size ISO 4401-03

Digital integrated electronics for open loop

Pressure control range
070 = 4 ÷ 70 bar
140 = 4 ÷ 140 bar
210 = 5 ÷ 210 bar
350 = 5 ÷ 350 bar

Series No.
(the overall and mounting dimensions remain unchanged from 30 to 39)

Seals:
N = NBR seals for mineral oil (**standard**)
V = FPM seals for special fluids

Reference signal:
E0 = voltage 0 ÷ 10 V
E1 = current 4 ÷ 20 mA

Main connection 6 pin + PE

Pin C function:
A = external enable
B = internal enable
C = 0V monitor

1.2 - Detailed symbol

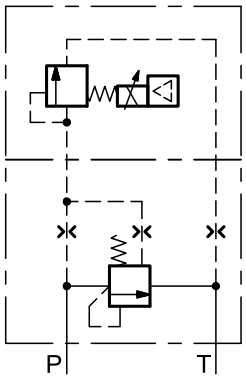

1.3 - Compact electronics

P R E 3 GL - _ / 10 _ - _ K12

Pressure control valve

Electro-proportional control

Size ISO 4401-03

Digital integrated electronics for open loop Compact version

Pressure control range
070 = 4 ÷ 70 bar
140 = 4 ÷ 140 bar
210 = 5 ÷ 210 bar
350 = 5 ÷ 350 bar

Series No. (the overall and mounting dimensions remain unchanged from 10 to 19)

Seals:
N = NBR seals for mineral oil (**standard**)
V = FPM seals for special fluids

Interfaces:
E0 = analogue, voltage 0 ÷ 10 V
E1 = analogue, current 4 ÷ 20 mA
IOL = IO-Link interface
CA = CAN Open

Connection: 5 pin M12

1.4 - Electronics with fieldbus communication

P R E 3 GH - _ / 32 _ - _ K16 / _ _ _ _

Pressure control valve

Electro-proportional control

Size ISO 4401-03

Digital integrated electronics for open loop with fieldbus communication

Pressure control range
070 = 4 ÷ 70 bar
140 = 4 ÷ 140 bar
210 = 5 ÷ 210 bar
350 = 5 ÷ 350 bar

Series No. (the overall and mounting dimensions remain unchanged from 30 to 39)

Seals:
N = NBR seals for mineral oil (**standard**)
V = FPM seals for special fluids

Reference signal:
E0 = voltage 0 ÷ 10 V **E1** = current 4 ÷ 20 mA
FD = full digital version (on request)

Main connection: 11 pin + PE

X1 Main connection configuration:
D1 = one command
D0 = full digital version (on request - available for reference signal FD type only)

X2, X3 Fieldbus type:
CA = CAN Open
PD = PROFIBUS DP
EC = EtherCAT
EN = Ethernet /IP
PN = Profinet
PL = PowerLink

X7 Digital transducer:
0 = none
1 = version 1 (SSI type)
2 = version 2 (Encoder type)

X4 Analogue transducer:
0 = none
1 = version 1 (single/double transducer)

2 - ELECTRONICS COMMON DATA

Duty cycle		100% (continuous operation)
Protection class according to EN 60529		IP65 / IP67
Supply voltage	V DC	24 (from 19 to 30 VDC), ripple max 3 Vpp
Power consumption	VA	25
Maximum solenoid current	A	1.88
Fuse protection, external	A	2A time lag
Managed breakdowns		Overload and electronics overheating, cable breakdown, supply voltage failures
Electromagnetic compatibility (EMC) emissions EN 61000-6-4, immunity EN 61000-6-2		According to 2014/30/EU standards

3 - PRE3G - STANDARD ELECTRONICS

3.1 - Electrical characteristics

Command signal: voltage (E0) current (E1)	V DC mA	0 ÷ 10 (Impedance Ri = 11 kOhm) 4 ÷ 20 (Impedance Ri = 58 Ohm)
Monitor signal (current to solenoid): voltage (E0) current (E1)	 V DC mA	 0 ÷ 10 (Impedance Ro > 1 kOhm) 4 ÷ 20 (Impedance Ro = 500 Ohm)
Communication for diagnostic		LIN-bus Interface (by means of the optional kit)
Connection		6 pin + PE (MIL-C-5015-G - DIN EN 175201-804)

3.2 - On-board electronics diagrams

VERSION A - External Enable

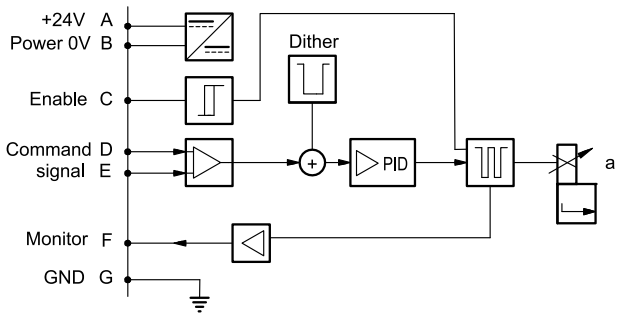

VERSION B - Internal Enable

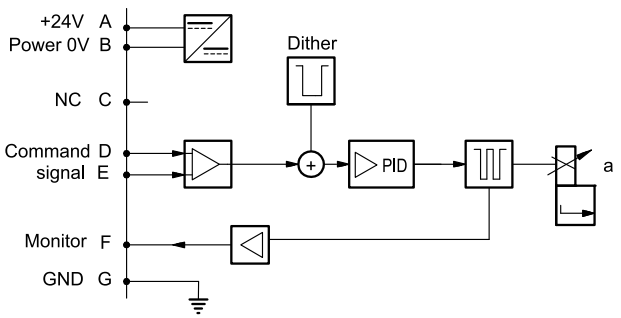

VERSION C - 0V Monitor

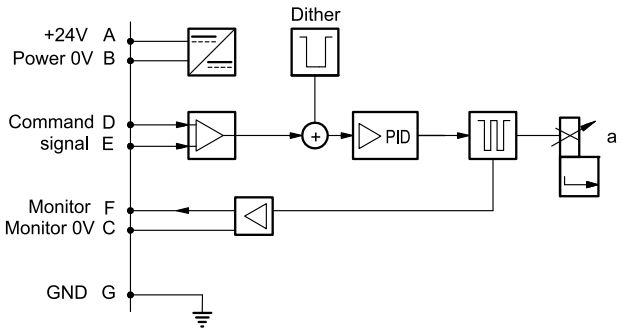

3.3 - Versions with voltage command (E0)

The reference signal is between 0 ÷ 10V. The monitor feature of versions B and C becomes available with a delay of 0,5 sec from the power-on of the card.

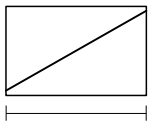

COMMAND	**0V**	**+10V**
MONITOR	**0V**	**+10V**

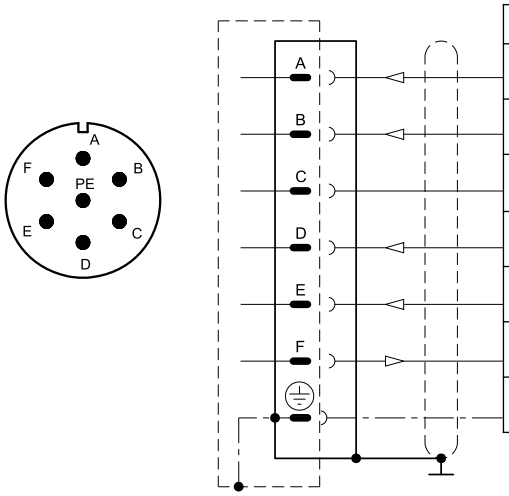

Pin	Values	version A	version B	version C
A	24 V DC	Supply Voltage		
B	0 V			
C		Enable 24 V DC	do not connect -	PIN F reference 0 V
D	0 ÷ 10 V	Command		
E	0 V	Command reference		
F	0 ÷ 10 V	Monitor (0V reference: pin B)		Monitor
PE	GND	Ground (Earth)		

3.4 - Versions with current command (E1)

The reference signal is supplied in current 4 ÷ 20 mA. If the current for command is lower, the card shows a breakdown cable error. To reset the error is sufficient to restore the signal.

The monitor feature of versions B and C becomes available with a delay of 0,5 sec from the power-on of the card.

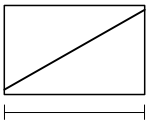

COMMAND	**4 mA**	**20 mA**
MONITOR	**4 mA**	**20 mA**

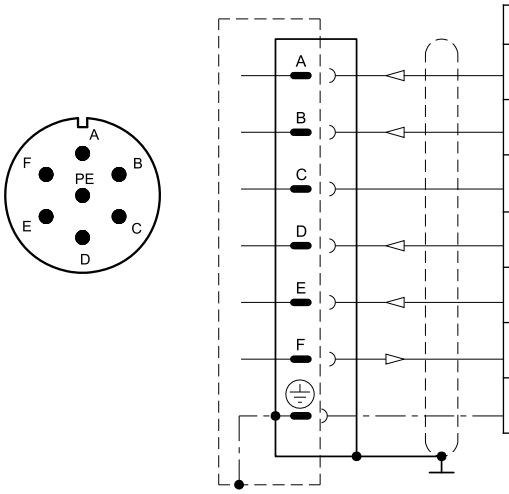

Pin	Values	version A	version B	version C
A	24 V DC	Supply Voltage		
B	0 V			
C		Enable 24 V DC	do not connect -	PIN F reference 0 V
D	4 ÷ 20 mA	Command		
E	0 V	Command reference		
F	4 ÷ 20 mA	Monitor (0V reference: pin B)		Monitor
PE	GND	Ground (Earth)		

4 - PRE3GL - COMPACT ELECTRONICS

In versions ‘IOL’ and ‘CA’ pin 3 and pin 5 are galvanic isolated up to100 V to avoid earth loops. In IO-Link networks, the length of the connecting cables is limited to 20 metres.

4.1 - Electrical characteristics

Command signal: voltage (E0) current (E1)	V DC mA	0 ÷ 10 (Impedance Ri = 11 kOhm) 4 ÷ 20 (Impedance Ri = 58 Ohm)
Monitor signal (current to solenoid): voltage (E0) current (E1)	V DC mA	0 ÷ 5 (Impedance Ro > 1 kOhm) 4 ÷ 20 (Impedance Ro = 500 Ohm)
IO-Link communication (IOL): Data rate	kBaud	IO-Link Port Class B 230.4
Can Open communication (CA): Data rate	kbit	10 ÷ 1000
Data register (IOL and CA versions only)		solenoid voltage supply, solenoid faults (shortcircuit, bad config, internal), box temperature, switch-on time, vibrations
Connection		5-pin M12 code A (IEC 61076-2-101)

4.2 - Pin tables

‘E0’ connection

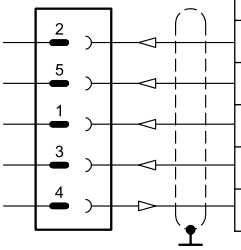

Pin	Values	Function
2	24 V DC	Supply voltage (solenoid and logic)
5	0 V	
1	0 ÷ 10 V	Command
3	0V	Command reference
4	0 ÷ 5V	Monitor (0V reference: pin 5)

’E1’ connection

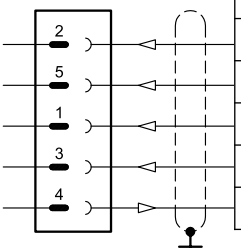

Pin	Values	Function
2	24 V DC	Supply voltage (solenoid and logic)
5	0 V	
1	4 ÷ 20 mA	Command
3	0V	Command reference
4	4 ÷ 20 mA	Monitor (0V reference: pin 5)

’IOL’ connection

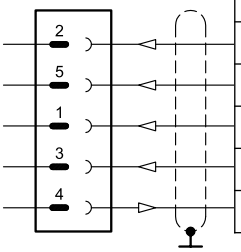

Pin	Values		Function
2	2L+	24 V DC	Supply of the power stage
5	2L-	0 V (GND)	Internal galvanic isolation from PIN 3
1	1L+	+24 V DC	IO-Link supply voltage
3	1L-	0V (GND)	
4	C/Q		IO-Link Communication

’CA’ connection

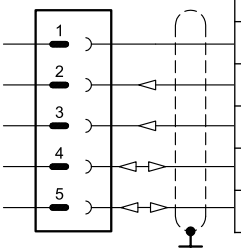

Pin	Values	Function
1	CAN_SH	Shield
2	24 V DC	Supply voltage
3	0 V (GND)	
4	CAN H	Bus line (high)
5	CAN_L	Bus line (low)

5 - PRE3GH - FIELDBUS ELECTRONICS

The 11+ PE pin connection allows separate supply voltage for electronics and solenoids.

Command - valve position schemes as for the standard electronics. Please refer to pictures in par. 3.3 and 3.4.

5.1 - Electrical characteristics

Command signal: voltage (E0) current (E1) digital (FD)	 V DC mA	 0 ÷ 10 (Impedance Ri = 11 kOhm) 4 ÷ 20 (Impedance Ri = 58 Ohm) via fieldbus
Monitor signal (current to solenoid): voltage (E0) current (E1)	 V DC mA	 0 ÷ 10 (Impedance Ro > 1 kOhm) 4 ÷ 20 (Impedance Ro = 500 Ohm)
Communication / diagnostic		via Bus register
Communication interface standards CAN Open PROFIBUS DP EtherCAT, Ethernet /IP, Profinet, PowerLink		 EN 50325-4 + DS408 EN 50170-2 / IEC 61158 IEC 61158
Communication physical layer CAN Open PROFIBUS DP EtherCAT, Ethernet /IP, Profinet, PowerLink		 optical insulated CAN ISO 11898 optical insulated RS485 fast ethernet, insulated 100 Base TX
Power connection		11 pin + PE (DIN 43651)

5.2 - X1 Main connection pin table

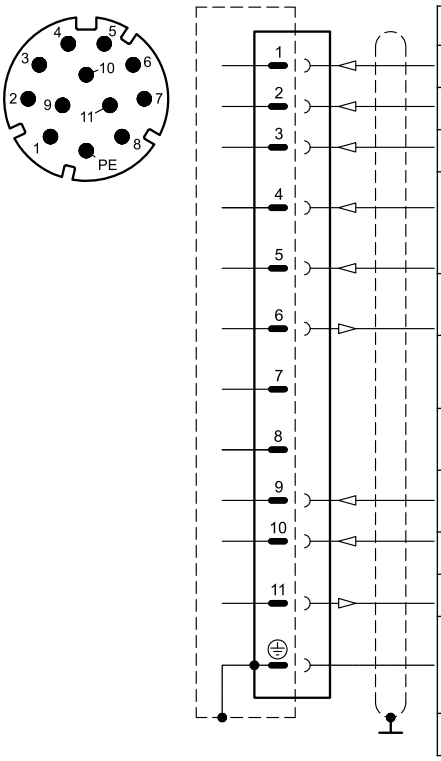

D1: one command

Pin	Values	Function
1	24 V DC	Main supply voltage
2	0 V	
3	24V DC	Enable
4	0 ÷ 10 V (E0) 4 ÷ 20 (E1)	Command
5	0 V	Command reference signal
6	0 ÷ 10 V (E0) 4 ÷ 20 (E1)	Monitor (0V reference pin 10)
7	NC	do not connect
8	NC	do not connect
9	24 V DC	Logic and control supply
10	0 V	
11	24 V DC	Fault (0V DC) or normal working (24V DC) (0V reference pin 2)
12	GND	Ground (Earth)

D0: full digital

Pin	Values	Function
1	24 V DC	Main supply voltage
2	0 V	
3	24V DC	Enable
4	NC	do not connect
5	NC	do not connect
6	NC	do not connect
7	NC	do not connect
8	NC	do not connect
9	24 V DC	Logic and control supply
10	0 V	
11	24 V DC	Fault (0V DC) or normal working (24V DC) (0V ref. pin 2)
12	GND	Ground (Earth)

5.3 - FIELDBUS connections

Please wire following guidelines provided by the relative standards communication protocol.

5.3.1 - Communication connection CA (CAN Open)

X2 (IN) connection: M12 A 5 pin female

Pin	Values	Function
1	CAN_SH	Shield
2	NC	Do not connect
3	GND	Signal zero for data line
4	CAN_H	Bus line (high)
5	CAN_L	Bus line (low)

X3 (OUT) connection: M12 A 5 pin male

Pin	Values	Function
1	CAN_SH	Shield
2	NC	Do not connect
3	GND	Signal zero for data line
4	CAN_H	Bus line (high)
5	CAN_L	Bus line (low)

5.3.2 - Communication connection PD (PROFIBUS DP)

X2 (IN) connection: M12 B 5 pin male (IN)

Pin	Values	Function
1	+5 V	Termination signal supply
2	PB_A	Bus line (high)
3	0 V	Signal zero for data line and termination
4	PB_B	Bus line (low)
5	SHIELD	

X3 (OUT) connection: M12 B 5 pin female

Pin	Values	Function
1	+5 V	Termination signal supply
2	PB_A	Bus line (high)
3	0 V	Signal zero for data line and termination
4	PB_B	Bus line (low)
5	SHIELD	

5.3.3 - Communication connections: EC (EtherCat), EN (Ethernet/IP), PN (PROFINET), PL (POWERLINK)

X2 (IN) connection M12 D 4 pin female

Pin	Values	Function
1	TX+	Transmitter
2	RX+	Receiver
3	TX-	Transmitter
4	RX-	Receiver
HOUSING	shield	

X3 (OUT) connection: M12 D 4 pin female

Pin	Values	Function
1	TX+	Transmitter
2	RX+	Receiver
3	TX-	Transmitter
4	RX-	Receiver
HOUSING	shield	

5.4 - Digital transducer connection
X7 connection: M12 A 8 pin female

VERSION 1: SSI type

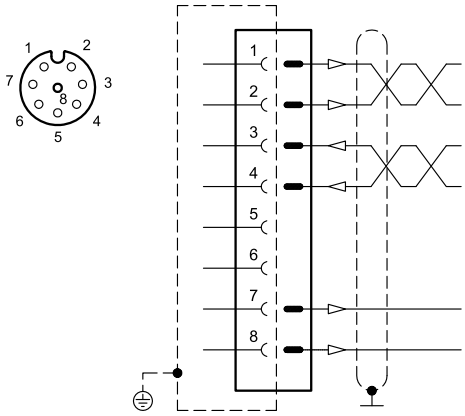

Pin	SSI Values	Function	Notes
1	CLK+	Serial synchronous clock (+)	Input - digital signal
2	CLK-	Serial synchronous clock (-)	
3	MIS0+	Serial position data (+)	
4	MIS0-	Serial position data (-)	
5	NC	-	do not connect
6	NC	-	
7	+24 V	transducer power supply	Output power supply
8	0 V	-	Common GND

VERSION 2: ENCODER type

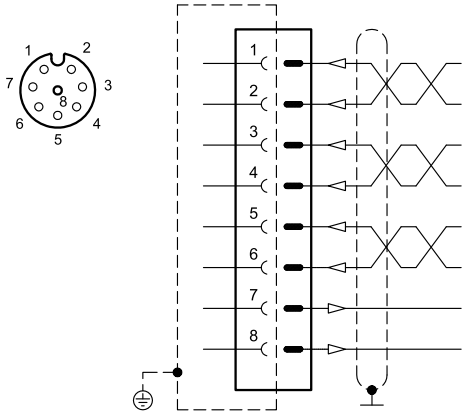

Pin	Values	Function	Notes
1	ENC_Z+	input channel Z+	Input - digital signal
2	ENC_Z-	input channel Z-	
3	ENC_A+	input channel A+	
4	ENC_A-	input channel A+	
5	ENC_B+	input channel B+	
6	ENC_B-	input channel B+	
7	+5 V	transducer power supply	Output power supply
8	0 V	-	Common GND

5.5 - Analogue transducer connection
X4 connection: M12 A 4 pin female

VERSION 1: single / double transducer
(single or double is a software-selectable option)

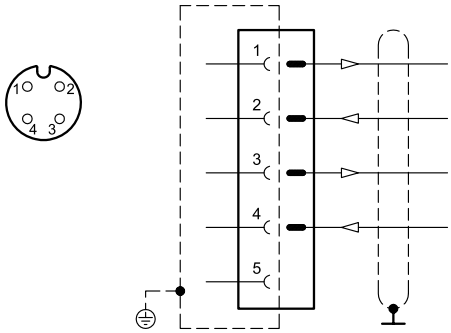

Pin	Values	Notes
1	+24 V	Remote transducer power supply (out) 100 mA
2	±10 V 4 ÷20 mA	Input signal of transducer 1 (range software selectable)
3	0 V	Common reference signal for transducer power and signals
4	±10 V 4 ÷20 mA	Input signal of transducer 2 (range software selectable)
5	-	

6 - CHARACTERISTIC CURVES

(measured with viscosity of 36 cSt at 50°C)

Typical control characteristics, according to the reference signal for available pressure control ranges, measured with input flow rate Q = 10 l/min. Characteristic curves measured without backpressure in T, with linearity compensation set by the onboard electronics.

The full scale pressure is set in factory with a flow rate of 10 l/min. In case of higher flow rate, the full scale pressure will increase (see diagram p max = f (Q)).

PRESSURE CONTROL p = f (I)

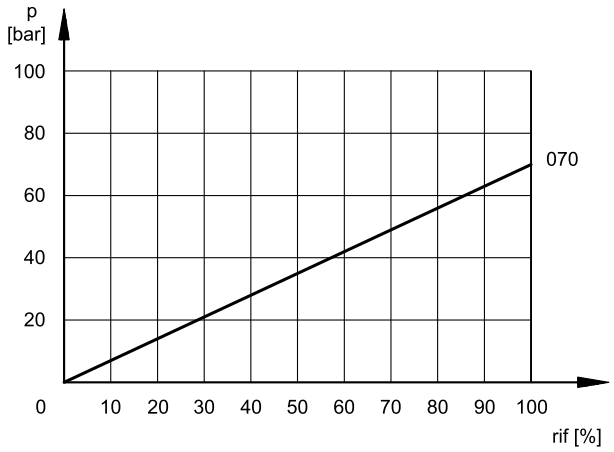

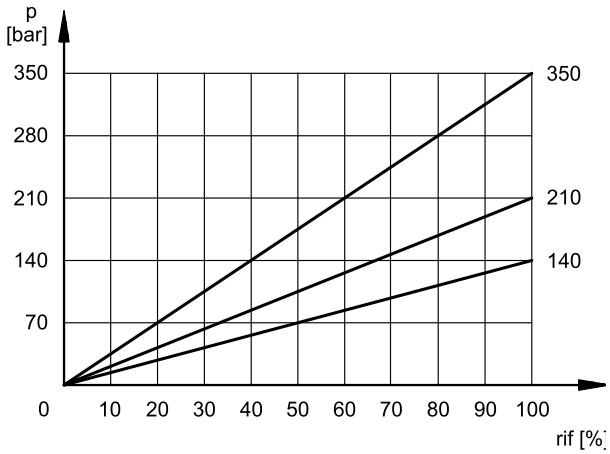

MINIMUM CONTROLLED PRESSURE p min = f (Q)

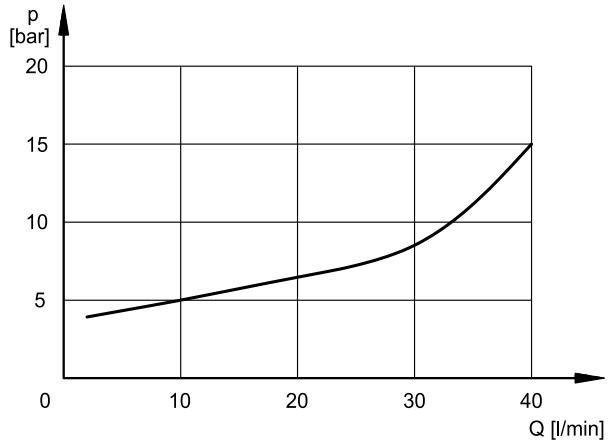

PRESSURE VARIATION p max = f (Q)

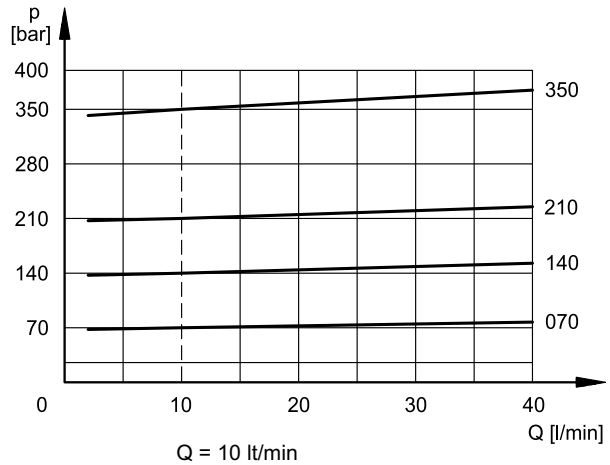

Q = 10 lt/min
factory setting

7 - STEP RESPONSE

(obtained with mineral oil with viscosity of 36 cSt at 50°C and electronic control card)

Step response is the time taken for the valve to reach 90% of the set pressure value following a step change of reference signal.

The table illustrates typical step response times measured with a PRE3G-210 and with an input flow rate of Q = 10 l/min and pressure oil volume of 0,1 litre.

The response time is affected both by the flow rate and the oil volume in the pipework.

REFERENCE SIGNAL STEP	0 → 100%	100 → 0%
Step response [ms]	80	40

8 - PRE3G - OVERALL AND MOUNTING DIMENSIONS

dimensions in mm

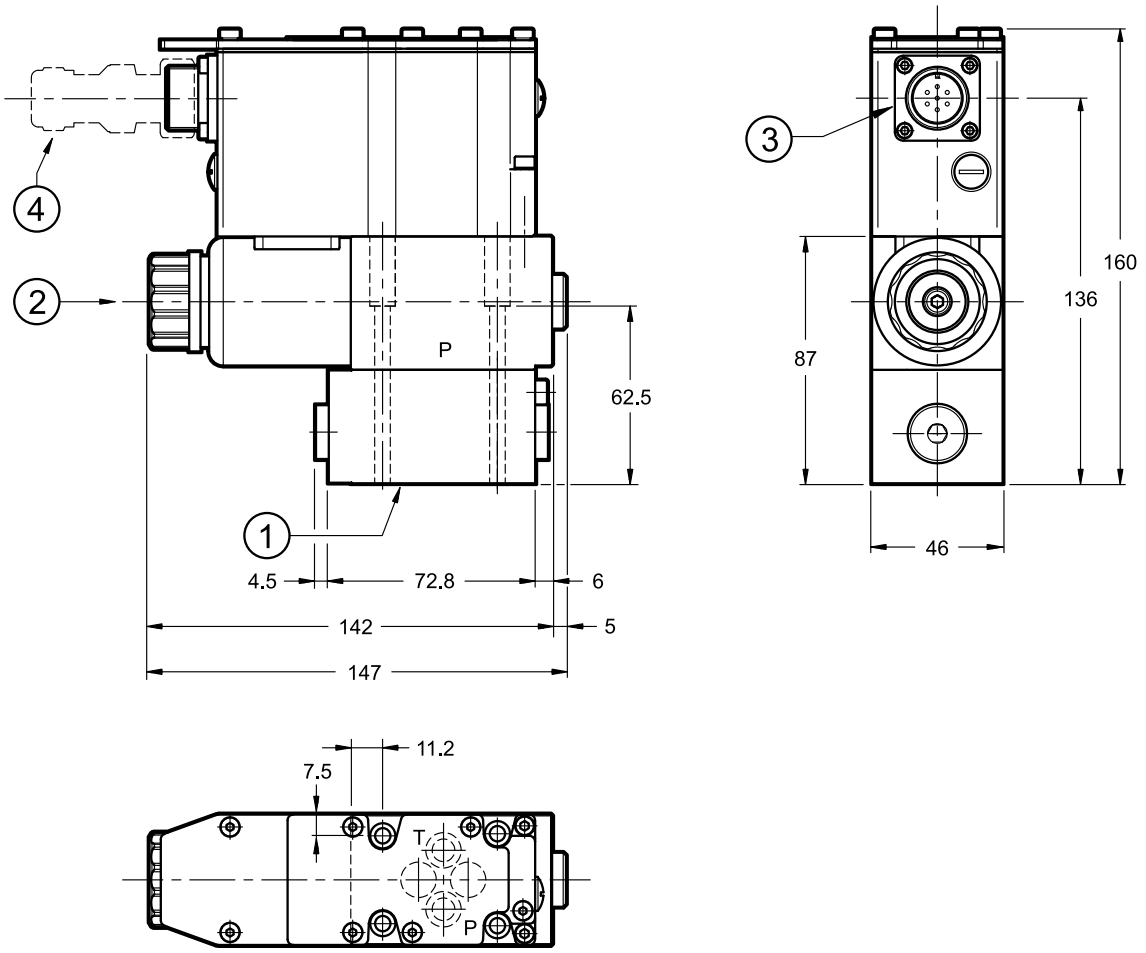

NOTE: at the first start up, or after a long period of no use, it is necessary to vent the air through the breather (2) placed at the end of

Fastening bolts: 4 SHC screws M5x70 - ISO 4762	
Torque: 5 Nm (A8.8)	
Threads of mounting holes: M5x10	

1	Mounting surface with sealing rings: 4 OR type 2037 - 90 shore (9.25 x 1.78)
2	Breather: Allen key 4
3	Main connection 6 pin + PE
4	Mating connector 6 poles + PE , female type MIL-5015-G **To be ordered separately.** See catalogue 89 000

9 - PRE3GL - OVERALL AND MOUNTING DIMENSIONS

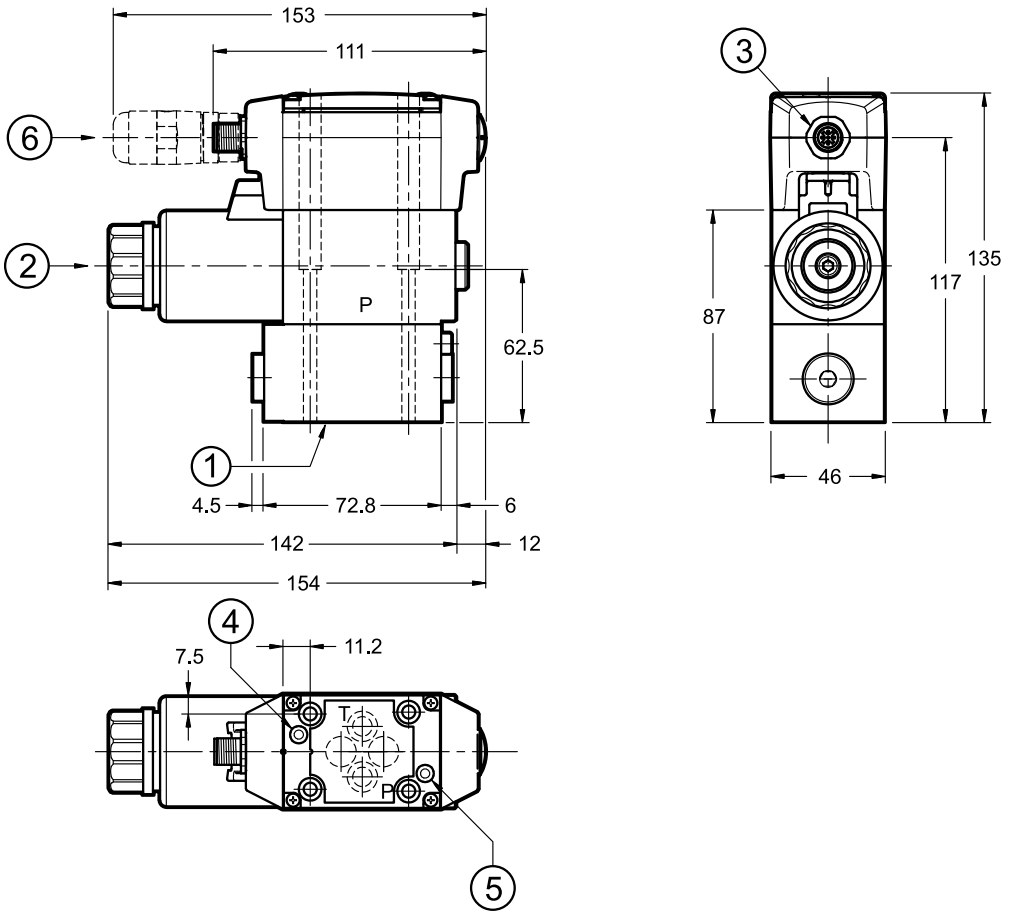

NOTE: at the first start up, or after a long period of no use, it is necessary to vent the air through the breather (2) placed at the end of the solenoid tube.

Fastening bolts: 4 bolts M5x70- ISO 4762
Torque: 5 Nm (A8.8)
Threads of mounting holes: M5x10

1	Mounting surface with sealing rings: N. 4 OR type 2037 (9.25x1.78) 90 Shore
2	Breather: Allen key 4
3	Connection M12 A 5 pin
4	L1 LED
5	L2 LED
6	Mating connector M12 5 poles - code A, female **To be ordered separately.** See catalogue 89 000

10 - PRE3GH - OVERALL AND MOUNTING DIMENSIONS

dimensions in mm

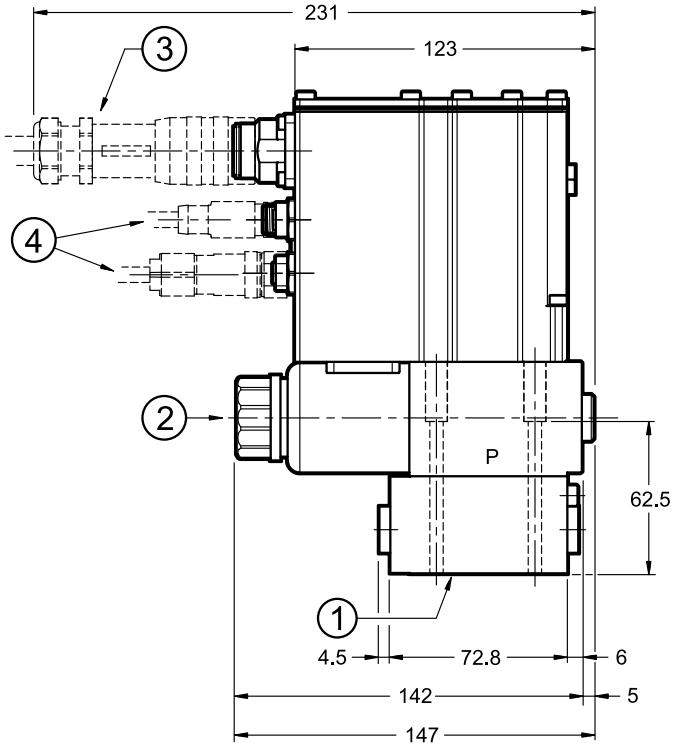

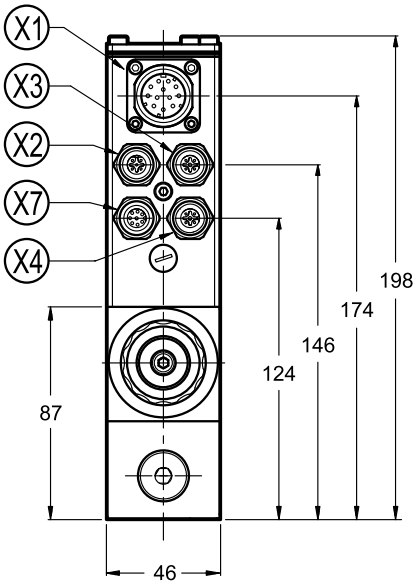

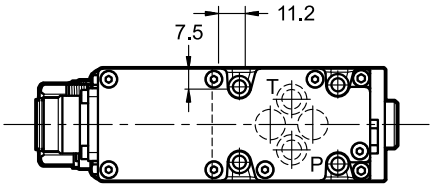

X1	Main connection 11 pin + PE
X2	Fieldbus communication (IN)
X3	Fieldbus communication (OUT)
X4	X4 connection for analogue transducer
X7	X7 connection for digital transducer

Fastening bolts: 4 bolts M5x70 - ISO 4762
Torque: 5 Nm (A8.8)
Threads of mounting holes: M5x10

NOTE 1: at the first start up, or after a long period of no use, it is necessary to vent the air through the breather (2) placed at the end of the solenoid tube.

NOTE 2: Depending on the chosen version, X4 and X7 connections may not be present.

Please refer to section 5 for connection descriptions and pinout.

1	Mounting surface with sealing rings: N. 4 OR type 2037 (9.25x1.78) 90 Shore
2	Breather: Allen key 4
3	Mating connector 11 poles + PE **To be ordered separately.** See catalogue 89 000
4	Mating connectors for fieldbus communication and signals **To be ordered separately.** See catalogue 89 000

11 - HYDRAULIC FLUIDS

Use mineral oil-based hydraulic fluids HL or HM type, according to ISO 6743-4. For these fluids, use NBR seals. For fluids HFDR type (phosphate esters) use FPM seals (code V). For the use of other kinds of fluid such as HFA, HFB, HFC, please consult our technical department.

Using fluids at temperatures higher than 80 °C causes a faster degradation of the fluid and of the seals characteristics. The fluid must be preserved in its physical and chemical characteristics.

12 - INSTALLATION

We recommend to install the valves either in horizontal position, or vertical position with the solenoid downward. If the valve is installed in vertical position and with the solenoid upward, you must consider possible variations of the minimum controlled pressure, if compared to what is indicated in section 6.

Ensure that there is no air in the hydraulic circuit. In particular applications, can be necessary to vent the air entrapped in the solenoid tube, by using the appropriate drain screw in the solenoid tube. So, ensure the solenoid tube is always filled with oil. When finished, make sure you have screwed the screw back in correctly.

Connect the valve T port directly to the tank. Add any backpressure value detected in the T line to the controlled pressure value. Maximum admissible backpressure in the T line, under operational conditions, is 2 bar.

Valves are fixed by means of screws or tie rods on a flat surface with planarity and roughness equal to or better than those indicated in the relative symbols. If minimum values are not observed, fluid can easily leak between the valve and support surface.

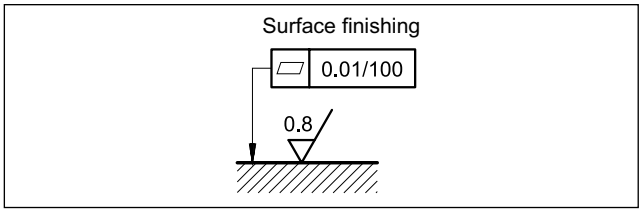

13 - ACCESSORIES
(to be ordered separately)

13.1 - Mating connectors

Mating connectors must be ordered separately. See catalogue 89 000.

For K11 and K16 versions we recommend the choice of a metal connector to avoid electromagnetic disturbances and to comply with EMC regulations on electromagnetic compatibility. If you opt for a plastic connector, make sure that it guarantees and maintains the IP and EMC protection characteristics of the valve.

13.2 - Mating connectors for fieldbus communication and for sensors.

Duplomatic offers spare parts to be wired and also ready-to-use cord sets. Please refer to cat. 89 000.

13.3 - Connection cable

The optimal wiring provides for 7 isolated conductors, with separate screen for the signal wires (command, monitor) and an overall screen.

Cross section for power supply:
- up to 20 m cable length : 1,0 mm^2
- up to 40 m cable length : 1,5 mm^2 (IO-Link excluded)

Cross section for signals (command, monitor):
- 0,50 mm^2

13.4 - Kit for start-up LINPC-USB

Device for service start-up and diagnostic, available for valves with K11 and K16 connection, see catalogue 89 850.

14 - SUBPLATES
(see catalogue 51 000)

PMMD-AI3G with ports on rear
PMMD-AL3G with side ports
Ports dimensions P, T, A, B: 3/8” BSP thread