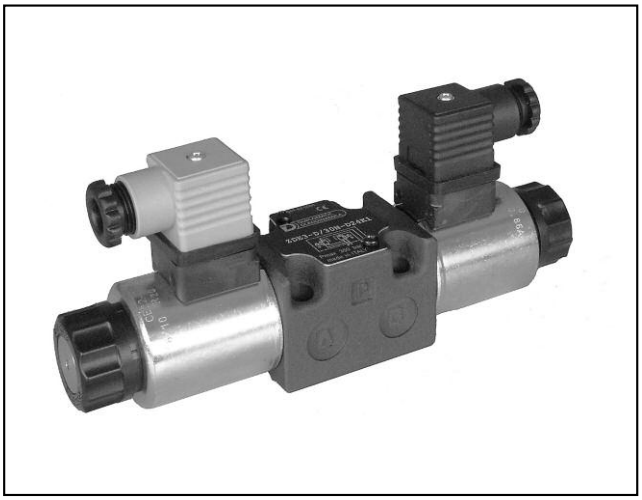

ZDE3

DIRECT OPERATED PRESSURE REDUCING VALVE WITH ELECTRIC PROPORTIONAL CONTROL

SERIES 30

SUBPLATE MOUNTING
ISO 4401-03

p max **100** bar
Q max **15** l/min

MOUNTING INTERFACE

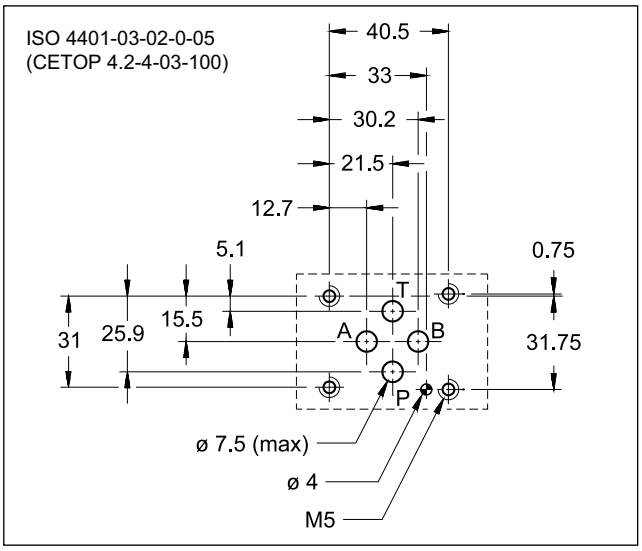

OPERATING PRINCIPLE

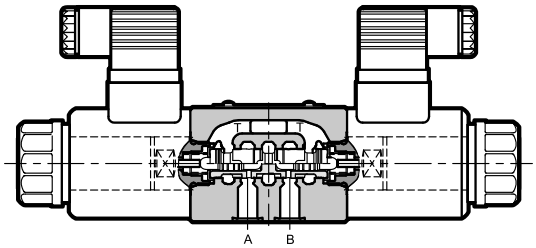

— ZDE3 valves are direct operated pressure reducing valves with electric proportional control, with mounting interface in compliance with ISO 4401 standards.

— These valves are used to reduce pressure in the secondary circuit branches thus ensuring stability of controlled pressure in the event of variations of the flow rate through the valve.

— The valve can be controlled directly by a current control supply unit or by means of the relative electronic control units to exploit valve performance to the full (see par. 10).

PERFORMANCES

(obtained with mineral oil with viscosity of 36 cSt at 50°C and electronic control card)

Pressure allowed on P port	bar	30 ÷ 100
Pressure allowed on T port (see par. 3)	bar	0 ÷ 30
Controlled pressure	bar	23
Minimum controlled pressure	see Δp-Q diagram	
Maximum flow	l/min	15
Step response	see paragraph 4	
Hysteresis (with PWM 200 Hz)	% of p nom	< 4%
Repeatability	% of p nom	< ±1%
Electrical characteristic	see paragraph 3	
Ambient temperature range	°C	-20 / +50
Fluid temperature range	°C	-20 / +80
Fluid viscosity range	cSt	10 ÷ 400
Fluid contamination degree	According to ISO 4406:1999 class 18/16/13	
Recommended viscosity	cSt	25
Mass: single solenoid valve double solenoid valve	kg	1,6 2

HYDRAULIC SYMBOLS

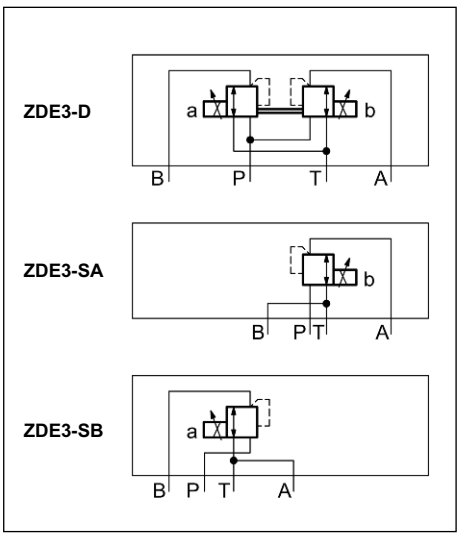

1 - IDENTIFICATION CODE

Z	D	E	3	-		/	30		-			/		

Pressure reducing valve

Electric proportional control

Size ISO 4401-03

Solenoids:
D = pressure reduction in A and B ports
SA = pressure reduction in A port (solenoid on side B)
SB = pressure reduction in B port (solenoid on side A)

Series No.
(from 30 to 39 sizes and mounting dimensions remain unchanged)

NOTE: The standard valve is supplied with surface treatment of phosphating black.

The zinc-nickel finishing makes the valve suitable to ensure a salt spray resistance up to 240 hours (test operated according to EN ISO 9227 standards and test evaluation operated according to UNI EN ISO 10289 standards).

Option:
/ W7 = Zinc-nickel surface treatment (see **NOTE**)
Omit if not required

Manual override (see par. 7)

Coil electrical connection:
(see paragraph 5)
K1 = plug for connector type EN 175301-803 (ex DIN 43650) (**standard**)
K7 = plug for connector type DEUTSCH DT04-2P male

D12 = Nominal solenoid voltage 12V DC
D24 = Nominal solenoid voltage 24V DC

Seals:
N = NBR seals for mineral oil (**standard**)
V = FPM seals for special fluids

2 - CHARACTERISTIC CURVES

(values obtained with a ZDE3-D/30N-D24K1 PWM 100 Hz and oil with viscosity 36 cSt at 50°C)

PRESSURE CONTROL p = f (I)

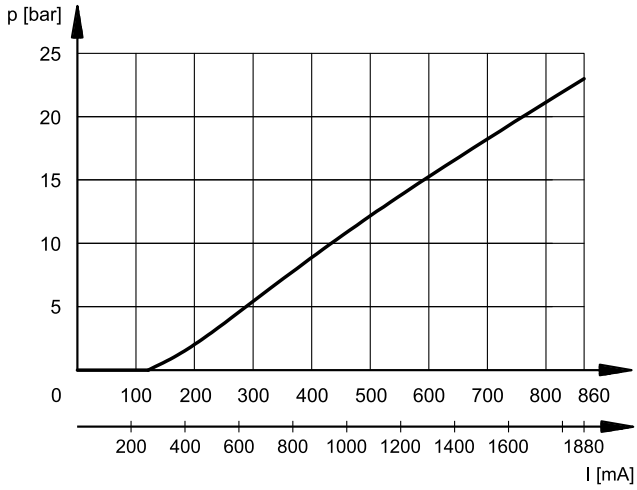

Pressure regulation is 0.5 bar lower in versions SA and SB

PRESSURE VARIATION p = f(Q)

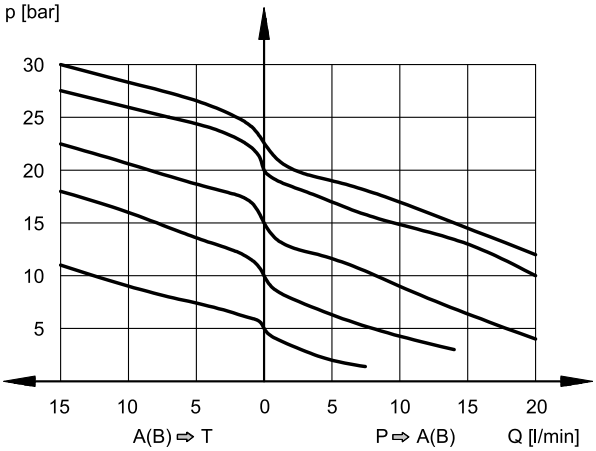

Curves have been obtained with inlet pressure 100 bar.

PRESSURE DROP Δp = f(Q)

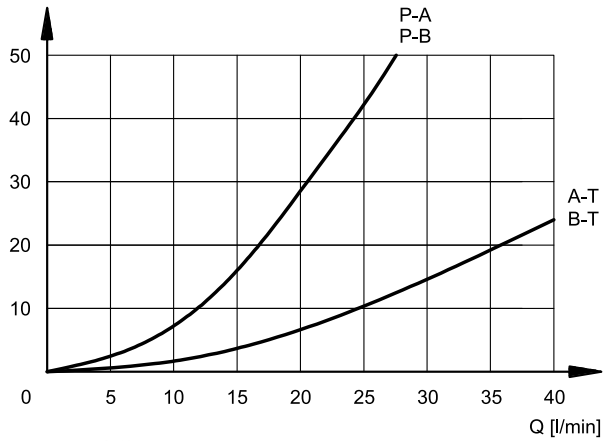

3 - ELECTRICAL CHARACTERISTICS

Proportional solenoid

The proportional solenoid comprises two parts: tube and coil.

The tube, screwed to the valve body, contains the armature which is designed to maintain friction to a minimum thereby reducing hysteresis.

The coil is mounted on the tube secured by means of a lock nut and can be rotated through 360° depending on installation clearances.

NOMINAL VOLTAGE		V DC	**12**	**24**
RESISTANCE (at 20°C)	K1 coil K7 coil	Ω	3.66 4	17.6 19
MAXIMUM CURRENT		A	1.88	0.86
DUTY CYCLE			100%	
PWM FREQUENCY		Hz	200	100
ELECTROMAGNETIC COMPATIBILITY (EMC)		According to 2014/30/EU		
PROTECTION FROM: Atmospheric agents (IEC 60529)		IP65		
CLASS OF PROTECTION: Coil insulation (VDE 0580) Impregnation		class H class F		

4 - STEP RESPONSE

(with mineral oil with viscosity of 36 cSt at 50°C and electronic control card)

Step response is the time taken for the valve to reach 90% of the set pressure value following a step change of reference signal.

The table illustrates typical step response times measured with input flow rate of Q = 5 l/min and p = 50 bar.

REFERENCE SIGNAL STEP	0 → 100%	100 → 0%
Step response [ms]	30	30

5 - ELECTRIC CONNECTIONS

Connectors for standard K1 connection are always supplied with the valve.

connection for EN 175301-803
(ex DIN 43650) connector
code **K1** (**standard**)

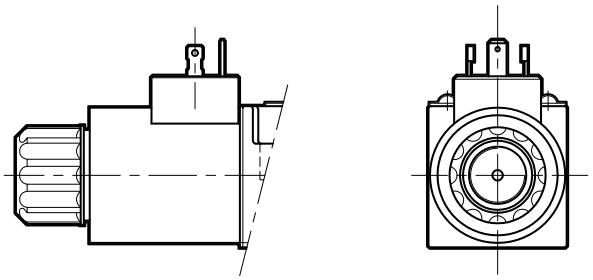

connection for
DEUTSCH DT06-2S male connector
code **K7**

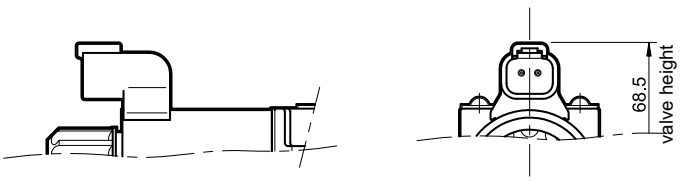

6 - OVERALL AND MOUNTING DIMENSIONS

dimensions in mm

ZDE3-D

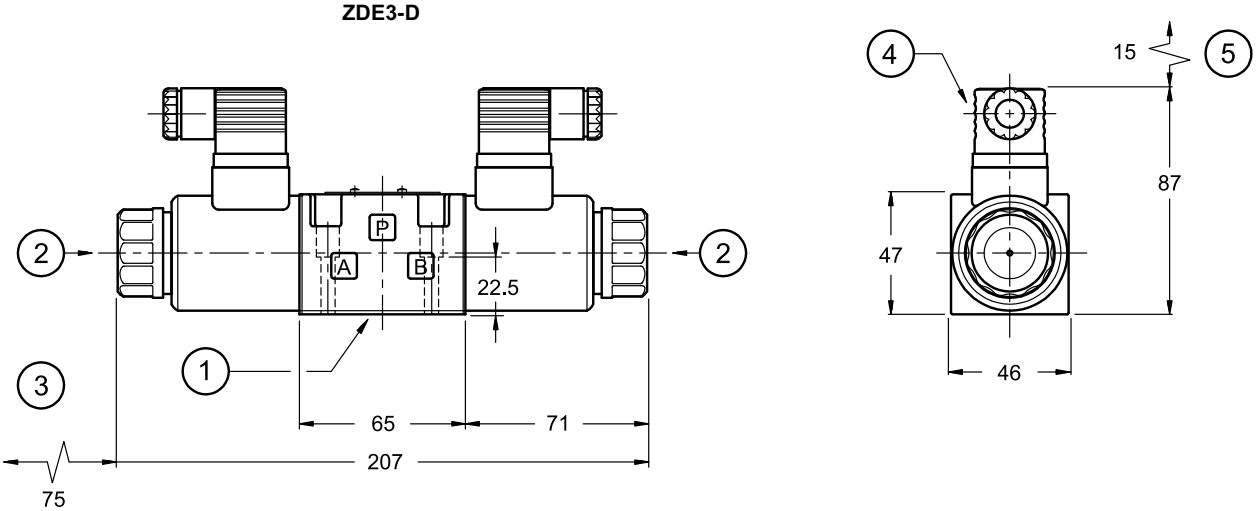

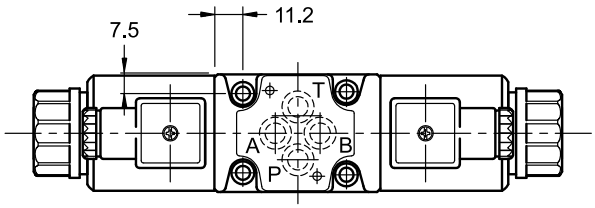

ZDE3-SA

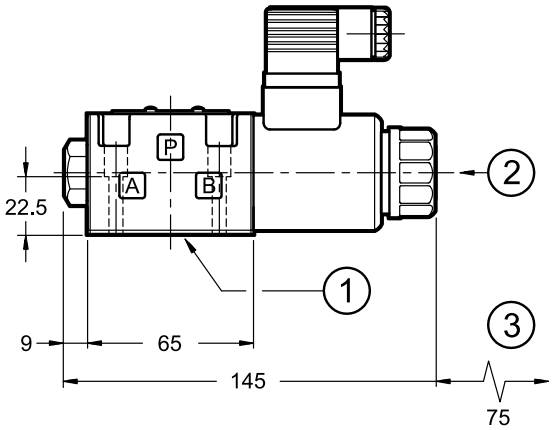

ZDE3-SB

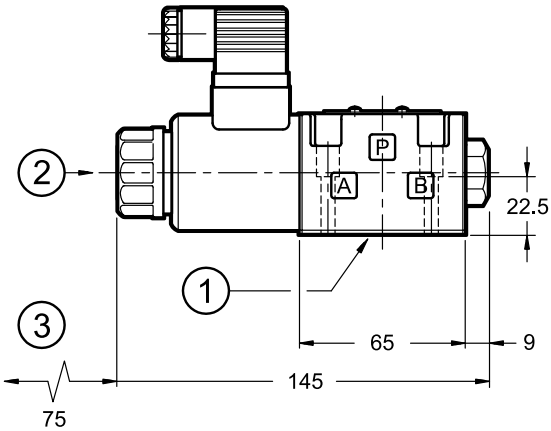

1	Mounting surface with sealing rings: 4 OR type 2037 - 90 shore (9.25x1.78)
2	Locking ring with boot protected manual override
3	Coil removal space
4	EN 175301-803 (ex DIN 43650) electrical connector
5	Connector removal space

Fastening bolts: 4 bolts M5x30 - ISO 4762
Torque: 5 Nm (A8.8)
Threads of mounting holes: M5x10

7 - MANUAL OVERRIDE

The standard valve has solenoids whose pin for the manual operation is integrated in the tube. The operation of this control must be executed with a suitable tool, minding not to damage the sliding surface.

Two different manual override version are available upon request:

- **CM** version, manual override belt protected
- **CS** version, screw override with metal ring nut, provided with a M4 screw and a blocking locknut to allow the continuous mechanical operation.

CAUTION!: The manual override use doesn't allow any proportional regulation; indeed using this kind of override, the main stage spool will open completely and the whole inlet pressure will pass through A or B line.

CM Version

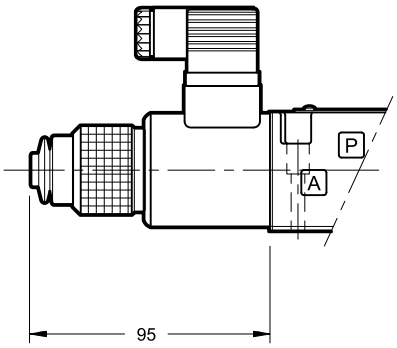

Code: 3803210003

CS Version

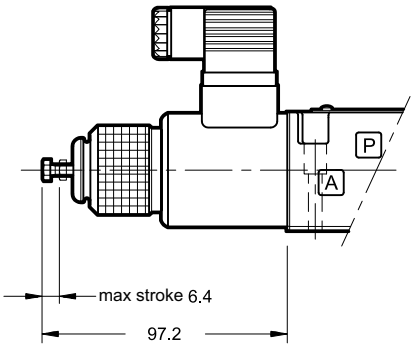

Code: 3803210004

8 - HYDRAULIC FLUIDS

Use mineral oil-based hydraulic fluids HL or HM type, according to ISO 6743-4. For these fluids, use NBR seals. For fluids HFDR type (phosphate esters) use FPM seals (code V). For the use of other fluid types such as HFA, HFB, HFC, please consult our technical department.

Using fluids at temperatures higher than 80 °C causes a faster degradation of the fluid and of the seals characteristics. The fluid must be preserved in its physical and chemical characteristics.

9 - INSTALLATION

The ZDE3 valves can be installed in any position without impairing correct operation.

Ensure that there is no air in the hydraulic circuit.

Valves are fixed by means of screws or tie rods on a flat surface with planarity and roughness equal to or better than those indicated in the relative symbols. If minimum values are not observed fluid can easily leak between the valve and support surface.

Connect the valve T port directly to the tank. Add any backpressure value detected in the T line to the reduced pressure value.

Maximum admissible backpressure in the T line, under operational conditions, is 30 bar.

Surface finishing

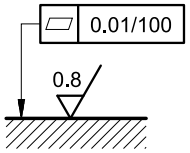

10 - ELECTRONIC CONTROL UNITS

ZDE3-SA* ZDE3-SB*

EDC-111	for solenoid 24V DC	plug version	see cat. 89 120
EDC-142	for solenoid 12V DC		
EDM-M111	for solenoid 24V DC	DIN EN 50022 rail mounting	see cat. 89 251
EDM-M142	for solenoid 12V DC		

ZDE3-D*

EDM-M211	for solenoid 24V DC	rail mounting DIN EN 50022	see cat. 89 251
EDM-M242	for solenoid 12V DC		

11 - SUBPLATES

(see catalogue 51 000)

Type PMMD-AI3G with rear ports
Type PMMD-AL3G with side ports
P, T, A, B port threading: 3/8” BSP