DOMINGA INDUSTRY SERVICE
UAB ''Domingos prekyba'' www.dominga.lt/eshop email: info@dominga.lt
Savanorių pr. 187- 4 korp., LT-02300 Vilnius, Lietuva, tel.: +370 5 2322231

EFFICIENCY

IE1 - ALUMINIUM

ASYNCHRONOUS THREE-PHASE MOTORS

Aluminium motors **IE1-MS** series.
Mounting positions **B3 - B5 - B5R - B14 - B14G**.

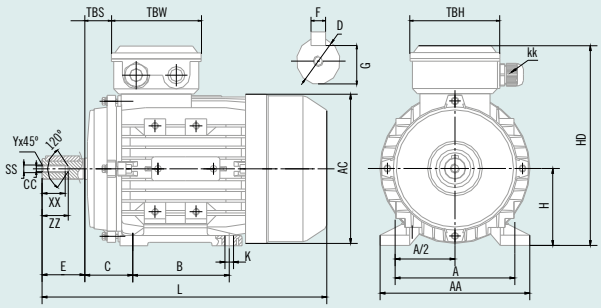

	IM B3 / IM 1001													SHAFT END Tolerance j6						
Frame	**A**	**AA**	**AC**	**B**	**C**	**H**	**HD**	**K**	**KK**	**L**	**TBS**	**TBW**	**TBH**	**D**	**E**	**F**	**G**	**SS**	**XX**	**ZZ**
56	90	110	117	71	36	56	156	5.8x5.8	1-M16x1.5	196	14	88	88	9	20	3	7.2	M3	9	12
63	100	120	130	80	40	63	173	7x10	1-M16x1.5	230	14	94	94	11	23	4	8.5	M4	10	14
71	112	132	147	90	45	71	188	7x10	1-M20x1.5	260	20	94	94	14	30	5	11.0	M5	12	17
80	125	160	163	100	50	80	217	10x13	1-M20x1.5	295	27	105	105	19	40	6	15.5	M6	16	21
90S	140	175	183	100	56	90	235	10x13	1-M20x1.5	315	30	105	105	24	50	8	20.0	M8	19	25
90L1	140	175	183	125	56	90	235	10x13	1-M20x1.5	335	30	105	105	24	50	8	20.0	M8	19	25
90L2	140	175	183	125	56	90	235	10x13	1-M20x1.5	365	30	105	105	24	50	8	20.0	M8	19	25
100*	160	198	205	140	63	100	253	12x15	2-M20x1.5	380 (400)	26	105	105	28	60	8	24.0	M10	22	30
112	190	220	229	140	70	112	282	12x15	2-M25x1.5	400	32	112	112	28	60	8	24.0	M10	22	30
132S	216	252	265	140	89	132	325	12x15	2-M25x1.5	440	38	112	112	38	80	10	33.0	M12	28	37
132M	216	252	265	178	89	132	325	12x15	2-M25x1.5	480	38	112	112	38	80	10	33.0	M12	28	37
132L	216	252	265	178	89	132	325	12x15	2-M25x1.5	500	38	112	112	38	80	10	33.0	M12	28	37
160M	254	290	325	210	108	160	390	15x19	2-M32x1.5	640	64	143	146	42	110	12	37.0	M16	36	45
160L	254	290	325	254	108	160	390	15x19	2-M32x1.5	640	64	143	146	42	110	12	37.0	M16	36	45

* Increased power (IEC frame).

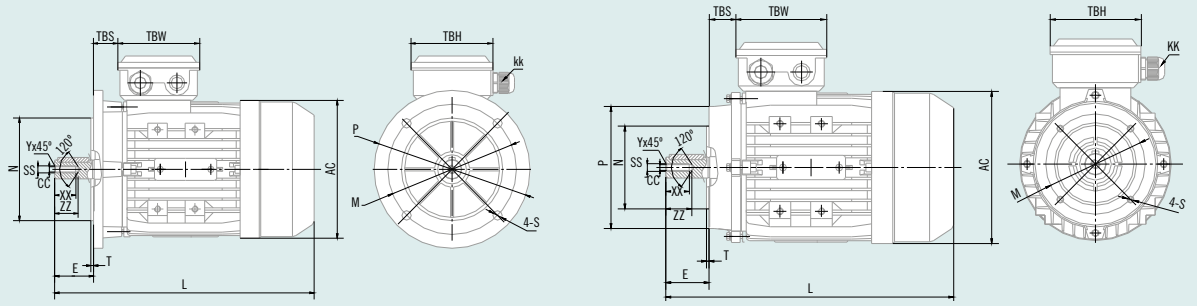

	IM B5 / IM 3001 4 holes 45º					IM B5R 4 holes 45º					IM B14 / IM 3601 4 holes 45º					IM B14G / IM 3601 G 4 holes 45º				
Frame	**M**	**N**	**P**	**S**	**T**	**M**	**N**	**P**	**S**	**T**	**M**	**N**	**P**	**S**	**T**	**M**	**N**	**P**	**S**	**T**
56	100	80	120	7	3.0	NON AVAILABLE					65	50	80	M5	2.5	NON AVAILABLE				
63	115	95	140	10	3.0	NON AVAILABLE					75	60	90	M5	2.5	100	80	120	M6	2.5
71	130	110	160	10	3.5	115	95	140	10	3.0	85	70	105	M6	2.5	115	95	140	M8	3.0
80	165	130	200	12	3.5	130	110	160	10	3.5	100	80	120	M6	3.0	130	110	160	M8	3.5
90	165	130	200	12	3.5	130	110	160	10	3.5	115	95	140	M8	3.0	130	110	160	M8	3.5
100	215	180	250	15	4.0	165	130	200	12	3.5	130	110	160	M8	3.5	165	130	200	M10	3.5
112	215	180	250	15	4.0	165	130	200	12	3.5	130	110	160	M8	3.5	165	130	200	M10	3.5
132	265	230	300	15	4.0	215	180	250	15	4.0	165	130	200	M10	4.0	215	180	250	M12	4.0
160	300	250	350	19	5.0	NON AVAILABLE					215	180	250	M12	4.0	NON AVAILABLE				

* Dimensions change depending on the motor series. Please contact to Cosgra for further information. MSE dimensions.

Cast iron motors **IE3-EG** series.
Mounting positions **B3 - B5**.

ASYNCHRONOUS THREE-PHASE MOTORS

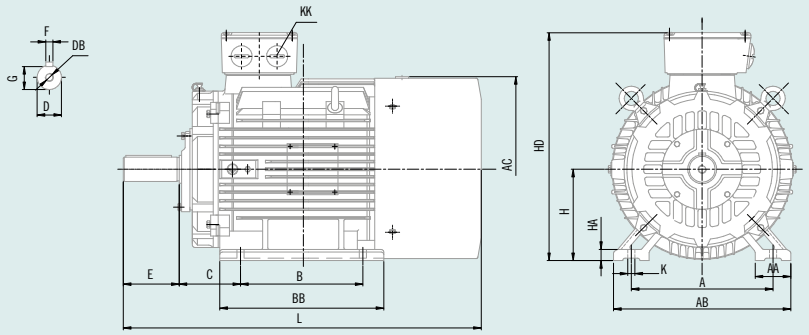

IM B3 / IM 1001												SHAFT END				
Frame	**Poles**	**A**	**AB**	**AC**	**B**	**C**	**H**	**HD**	**K**	**KK**	**L**	**D**	**DB**	**E**	**F**	**G**
160 M	2-4-6	254	320	330	214	108	160	420	15	2-M40x1.5	700	42	M16x36	110	12	37.0
160 L	2-4-6	254	320	330	254	108	160	420	15	2-M40x1.5	740	42	M16x36	110	12	37.0
180 M	2-4-6	279	355	380	241	121	180	455	15	2-M40x1.5	790	48	M16x36	110	14	42.5
180 L	2-4-6	279	355	380	279	121	180	455	15	2-M40x1.5	790	48	M16x36	110	14	42.5
200 L	2-4-6	318	395	420	305	133	200	505	19	2-M50x1.5	830	55	M20x42	110	16	49.0
225 S	4	356	435	470	286	149	225	560	19	2-M50x1.5	830	60	M20x42	140	18	53.0
225 M	2	356	435	470	311	149	225	560	19	2-M50x1.5	825	55	M20x42	110	16	49.0
225 M	4-6	356	435	470	311	149	225	560	19	2-M50x1.5	855	60	M20x42	140	18	53.0
250 M	2	406	490	510	349	168	250	615	24	2-M63x1.5	915	60	M20x42	140	18	53.0
250 M	4-6	406	490	510	349	168	250	615	24	2-M63x1.5	915	65	M20x42	140	18	58.0
280 S	2	457	550	580	368	190	280	680	24	2-M63x1.5	985	65	M20x42	140	18	58.0
280 S	4-6	457	550	580	368	190	280	680	24	2-M63x1.5	985	75	M20x42	140	20	67.5
280 M	2	457	550	580	419	190	280	680	24	2-M63x1.5	1035	65	M20x42	140	18	58.0
280 M	4-6	457	550	580	419	190	280	680	24	2-M63x1.5	1035	75	M20x42	140	20	67.5
315 S	2	508	635	645	406	216	315	845	28	2-M63x1.5	1180	65	M20x42	140	18	58.0
315 S	4-6	508	635	645	406	216	315	845	28	2-M63x1.5	1290	80	M20x42	170	22	71.0
315 M	2	508	635	645	457	216	315	845	28	2-M63x1.5	1210	65	M20x42	140	18	58.0
315 M	4-6	508	635	645	457	216	315	845	28	2-M63x1.5	1320	80	M20x42	170	22	71.0
315 L	2	508	635	645	508	216	315	845	28	2-M63x1.5	1210	65	M20x42	140	18	58.0
315 L	4-6	508	635	645	508	216	315	845	28	2-M63x1.5	1320	80	M20x42	170	22	71.0
355 M	2	610	730	710	560	254	355	1010	28	2-M72x2.0	1500	75	M24x50	140	20	67.5
355 M	4-6	610	730	710	560	254	355	1010	28	2-M72x2.0	1530	95	M24x50	170	25	86.0
355 L	2	610	730	710	630	254	355	1010	28	2-M72x2.0	1500	75	M24x50	140	20	67.5
355 L	4-6	610	730	710	630	254	355	1010	28	2-M72x2.0	1530	95	M24x50	170	25	86.0

* Shaft end tolerances: k6 up to D. 48. The rest, m6.

IM B5 / IM 3001						
Frame	**P**	**N**	**M**	**S**	**T**	**LA**
160	350	250	300	19	5	15
180	350	250	300	19	5	15
200	400	300	350	19	5	17
225	450	350	400	19	5	19
250	550	450	500	19	5	20
280	550	450	500	19	5	22
315	660	550	600	24	6	24
355	800	680	740	24	6	25

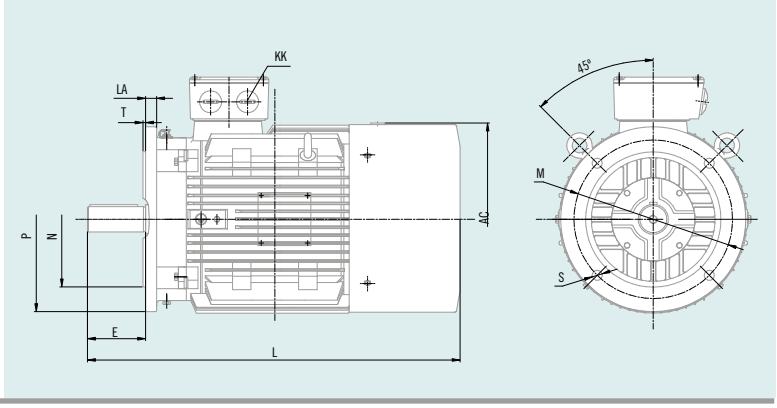

* Frames 160, 180 and 200, 4 holes 45º. The rest, 8 holes 22.5º.
* Dimensions change depending on the motor series. Please contact to Cosgra for further information. EGQ dimensions.

EFFICIENCY

IE1 - IE2 - CAST IRON

Cast iron motors **IE1-IE2 EG** series.
Mounting positions **B3 - B5**.

ASYNCHRONOUS THREE-PHASE MOTORS

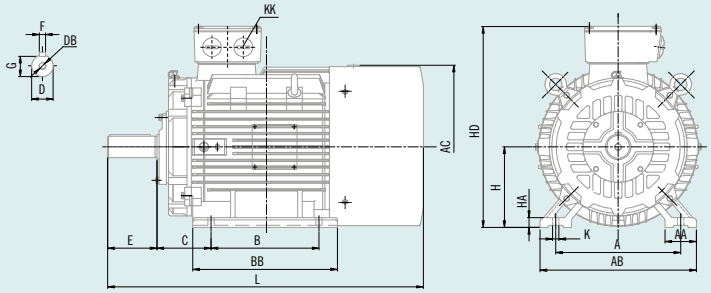

IM B3 / IM 1001															SHAFT END				
Frame	**Poles**	**A**	**AA**	**AB**	**AC**	**B**	**BB**	**C**	**H**	**HA**	**HD**	**K**	**KK**	**L**	**D**	**DB**	**E**	**F**	**G**
160M	2-8	254	73	320	330	210	318	108	160	20	420	15	2-M40x1.5	659	42	M16x36	110	12	37.0
160L	2-8	254	73	320	330	254	362	108	160	20	420	15	2-M40x1.5	714	42	M16x36	110	12	37.0
180M	2-8	279	73	355	380	241	349	121	180	22	455	15	2-M40x1.5	738	48	M16x36	110	14	42.5
180L	2-8	279	73	355	380	279	387	121	180	22	455	15	2-M40x1.5	778	48	M16x36	110	14	42.5
200L	2-8	318	73	395	400	305	375	133	200	25	505	19	2-M50x1.5	770	55	M20x42	110	16	49.0
225S	4-8	356	83	435	470	286	375	149	225	28	560	19	2-M50x1.5	820	60	M20x42	140	18	53.0
225M	2	356	83	435	470	311	400	149	225	28	560	19	2-M50x1.5	815	55	M20x42	110	16	49.0
225M	4-8	356	83	435	470	311	400	149	225	28	560	19	2-M50x1.5	845	60	M20x42	140	18	53.0
250M	2	406	88	490	510	349	450	168	250	30	615	24	2-M63x1.5	910	60	M20x42	140	18	53.0
250M	4-8	406	88	490	510	349	450	168	250	30	615	24	2-M63x1.5	910	65	M20x42	140	18	58.0
280S	2	457	93	550	547	368	490	190	280	35	680	24	2-M63x1.5	985	65	M20x42	140	18	58.0
280S	4-8	457	93	550	547	368	490	190	280	35	680	24	2-M63x1.5	985	75	M20x42	140	20	67.5
280M	2	457	93	550	547	419	540	190	280	35	680	24	2-M63x1.5	1035	65	M20x42	140	18	58.0
280M	4-8	457	93	550	547	419	540	190	280	35	680	24	2-M63x1.5	1035	75	M20x42	140	20	67.5
315S	2	508	120	635	645	406	575	216	315	45	845	28	2-M63x1.5	1185	65	M20x42	140	18	58.0
315S	4-8	508	120	635	645	406	575	216	315	45	845	28	2-M63x1.5	1215	80	M20x42	170	22	71.0
315M	2	508	120	635	645	457	685	216	315	45	845	28	2-M63x1.5	1295	65	M20x42	140	18	58.0
315M	4-8	508	120	635	645	457	685	216	315	45	845	28	2-M63x1.5	1325	80	M20x42	170	22	71.0
315L	2	508	120	635	645	508	685	216	315	45	845	28	2-M63x1.5	1295	65	M20x42	140	18	58.0
315L	4-8	508	120	635	645	508	685	216	315	45	845	28	2-M63x1.5	1325	80	M20x42	170	22	71.0
355M	2	610	120	730	710	560	750	254	355	52	1010	28	2-M63x1.5	1500	75	M24x50	140	20	67.5
355M	4-8	610	120	730	710	560	750	254	355	52	1010	28	2-M63x1.5	1530	100	M24x50	210	28	90.0
355L	2	610	120	730	710	630	750	254	355	52	1010	28	2-M63x1.5	1500	75	M24x50	140	20	67.5
355L	4-8	610	120	730	710	630	750	254	355	52	1010	28	2-M63x1.5	1530	100	M24x50	210	28	90.0

* Shaft end tolerances: k6 up to D. 48. The rest, m6.

IM B5 / IM 3001						
Frame	**P**	**N**	**M**	**S**	**T**	**LA**
160	350	250	300	19	5	15
180	350	250	300	19	5	15
200	400	300	350	19	5	17
225	450	350	400	19	5	19
250	550	450	500	19	5	20
280	550	450	500	19	5	22
315	660	550	600	24	6	24
355	800	680	740	24	6	25

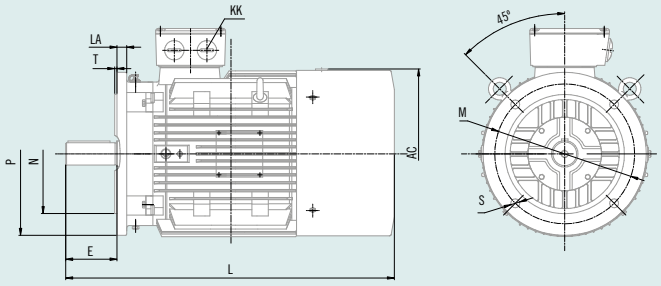

* Frames 160, 180 and 200, 4 holes 45º. The rest, 8 holes 22.5º.
* Dimensions change depending on the motor series. Please contact to Cosgra for further information. EGQ dimensions.