HYVA CYLINDER

715 07 580

Front end cylinder with outer cover | **type** | **FC 191-5-07130-000A-K0343**
tipping weight | **49-72 ton**
page # 1 / 2 | **closed length (K)** | **338-373 mm**

front & side view cylinder

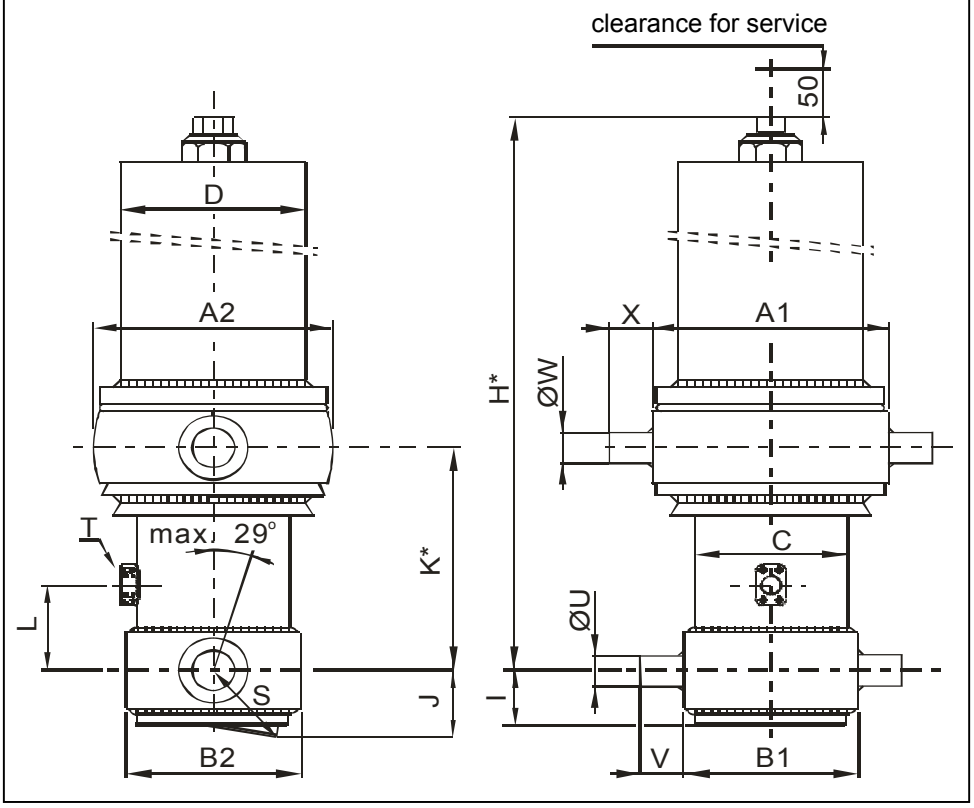

	1	2	
A	360	362	mm
B	245	248	mm
C	214		mm
D	273		mm
E			mm
F			mm
G*			mm
H*	1772		mm
I	70		mm
J	116		mm
K*	343		mm
L	190		mm
M*			mm
N			mm
O			mm
P			mm
Q			mm
R			mm
S	139		mm
T	1" SAE		
U	60		mm
V	65		mm
W	60		mm
X	65		mm
Y			mm
Z			mm

*incl.20[-5;30] pull out on piston

specifications

weight cylinder only	420	kg
total volume	140	L
working volume	130	L
maximum pressure	190	bar
maximum pump flow	190	L/min
maximum cylinder angle to front	10	°
maximum thrust first stage**	40	ton

**when cyl. mounted at a large angle, thrust first stage may become too high: see Hyva Tipper Program

technical notes

This cylinder is a lifting device only and may not be used as structural member or be subject to side load. Working pressure depends on application; never exceed maximum pressure.
Cylinder painted with Akzo Air drying Enamel (RAL9005).
Max duration of extension 2 hours (excluded HC).
See mounting instruction CYL-0019.
See oil specification sheet OIL-0002.
See bracket specification sheet 015BRA01.

extension	1	2	3	4	5	6	7	8	9	
effective diameter [mm]	191	169	149	129	110					total
stroke [mm]	1410	1430	1430	1430	1430					7130

tipping weight

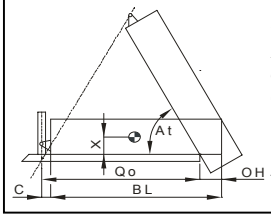

BL (body length);
OH (rear overhang);
X=Ycog (vert. pos. centre of gravity);
Qo (pivot length);
C (bracket length);

At = stroke x 60 / Qo

tipping weight at maximum pressure of 190 bar and C is 229 mm

BL	9500			9150			8800		
OH	200	500	800	200	500	800	200	500	800
At	44	46	47	46	48	49	48	50	52
Ycog									
600	49	52	56	50	54	58	52	56	60
900	52	55	60	53	57	62	55	60	66
1200	55	59	64	57	62	68	59	65	72

HYVA CYLINDER

715 07 580

Front end cylinder with outer cover **type** **FC 191-5-07130-000A-K0343**

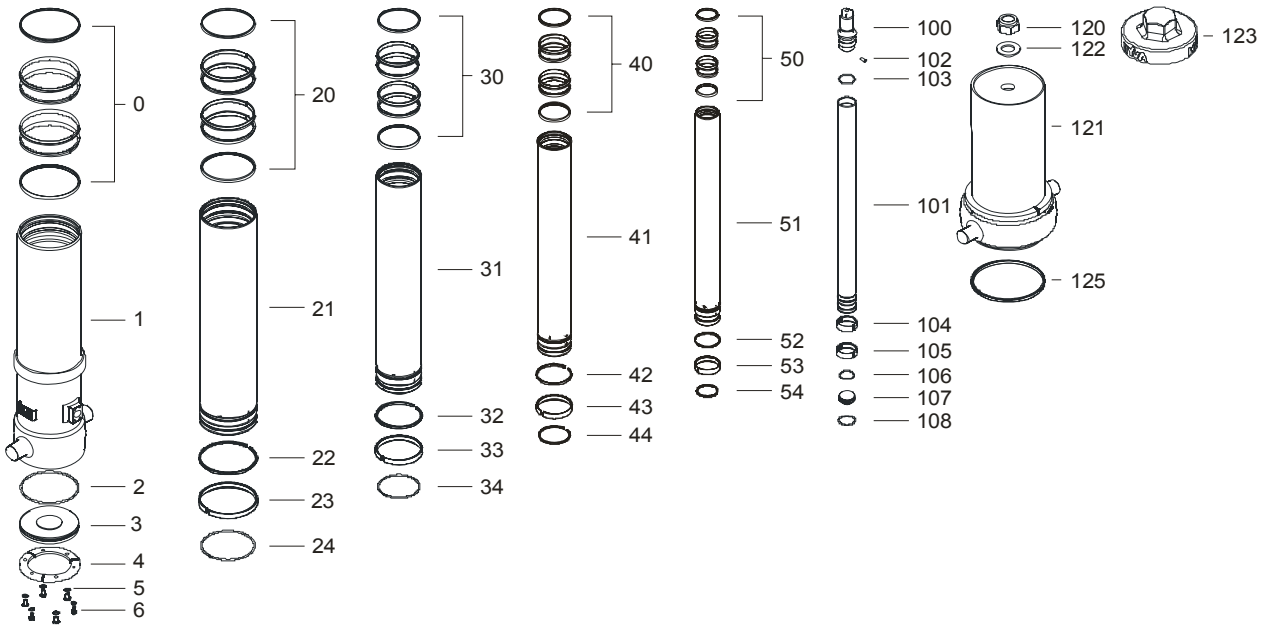

Spare part list

Pos	Part no.	Description	Qty.
0	71802214 K	PACKSET 214	01
1	72508650R1345	BASE 214-1697-4/4SAE-190-C273	01
2	71870045 K	SEAL BOTTOM PLATE 214	01
3	71821214	BOTTOM PLATE 214	01
4	71820214	LOCKING PLATE 214	03
5	01732523 K	SPRING WASHER M12 SET	01
6	01732020 K	BOLT M12 X 1.25 X 25 SET	01
20	71802191 K	PACKSET 191	01
21	72607650	STAGE 191-1650	01
22	71811191 K	OUTER STOPRING 191	01
23	71807191 K	SLIDER 191	01
24	71813191 K	LIFTRING 191	01
30	71802169 K	PACKSET 169	01
31	72606650	STAGE 169-1650	01
32	71811169 K	OUTER STOPRING 169	01
33	71807169 K	SLIDER 169	01
34	71813169 K	LIFTRING 169	01
40	71802149 K	PACKSET 149	01
41	72605650	STAGE 149-1650	01
42	71811149 K	OUTER STOPRING 149	01
43	71807149 K	SLIDER 149	01
44	71812149 K	LIFTRING 149	01

Spare part list

Pos	Part no.	Description	Qty.
50	71802129 K	PACKSET 129	01
51	72604650	STAGE 129-1650	01
52		NOT APPLICABLE	
53	71807129 K	SLIDER 129 (2 X 1/2)	02
54	71812129 K	LIFTRING 129	01
100	71831110	PISTON HEAD 110 MACHINED	01
101	72403651	PISTON S 110-1655-HC	01
102	71875010	PIN ROUND HEAD GROOVED 6x15 mm	01
103	71870120 K	O-RING PISTON TOP 110	01
104	71807110 K	SLIDER 110 (2 X 1/2)	01
105	71807110 K	SLIDER 110 (2 X 1/2)	01
106	71870220	O-RING PISTON BOTTOM 110	01
107	71822110	BOTTOM PLATE PISTON 110	01
108	71814110	SNAPRING FOR PISTON 110	01
120	01702907	TOPNUT M48x3	01
121	71707634	COVER 273-1445	01
122	01702956	WASHER M48	01
123	01702971	DUST COVER FOR COVER 273 YELLOW C(	01
125	01791953	O-RING COVER D273	01

Seal kit complete:

Part no.	Description
71901750 K	Seal kit complete: consists of all packsets with packset grease, O-rings and Pin (pos.102)