Motor SCM 012–034 SAE B2

Sunfab now expands the SCM family and offers a two-bolt flange, SAE B2 012-034.

The design features double tapered roller bearings, which permits high shaft loads and gives superb speed performance.

Type		012	017	025	034
Displacement	cu in/rev.	0.77	1.04	1.55	2.09
Working pressure					
max. intermittent	psi	5800	5800	5800	5800
max. continuous	psi	5075	5075	5075	5075
Revolutions					
max. intermittent	RPM	8250	8250	6500	6500
max. continuous	RPM	7500	7500	5900	5900
min. continuous	RPM	300	300	300	300
Power					
max. intermittent	hp	67	94	107	147
max. continuous	hp	27	34	54	74
Start torque theoretical value	lb-ft/1000 psi	10	14	20	27
Mass moment of inertia (x 10^{-3})	lb-ft-sec^2	0.7	0.7	0.8	0.8
Weight	lb	21	21	21	21

Data concerning RPM are based on maximum permitted peripheral velocity for the tapered roller bearings.

Intermittent power data are based on maximum continuous speed and maximum working pressure.

Continuous power data are based on maximum output power without external cooling of the motor housing.

Intermittent duty is defined as follows: max 6 seconds per minute, e g peak RPM when unloading or accelerating.

Choice of shaft seal

Motor SCM	Code	Temp. °F	Max. housing pressure psi at RPM 1000	2000	3000	4000	5000	6000	7000	8000
012-034	N	167	80	39	26	20	16	13	12	10
	H	167	357	178	119	88	71	59	51	45
	V	194	80	39	26	20	16	13	12	10

Code according to Versions, main data.

Factors affecting the choice of shaft seal include the hydraulic motor housing pressure and the drainage oil temperature.

The drainage oil should have a maximum temperature of 167 °F with a Nitrile shaft seal and 194 °F with a Viton shaft seal. These temperatures must not be exceeded.

Subject to design modifications without notice

Versions, main data

Example **M-034 W/N-B2 S / U / S**

Type:
M Motor with fixed displacement

Size:
012
017
025
034

Direction of rotation:
W Independent

Shaft seal:
N Nitrile
H Nitrile, high pressure
V Viton, high temperature

Mounting flange:
B2 SAE B (SAE J744)

Type of shaft:
S Spline shaft (SAE J498b)
SCM 012-034 SAE B 13T 16/32 30° CLASS 5

K Key shaft (SAE J744)
SCM 012-034 SAE B ∅ 1.00

Connections:
U UN thread
SCM 012-034
G ISO G thread
SCM 012-034

Connection cover:
S 40° to the shaft center line
K Combined (only available with ISO G thread)

Dimensions SCM 012-034 SAE B2

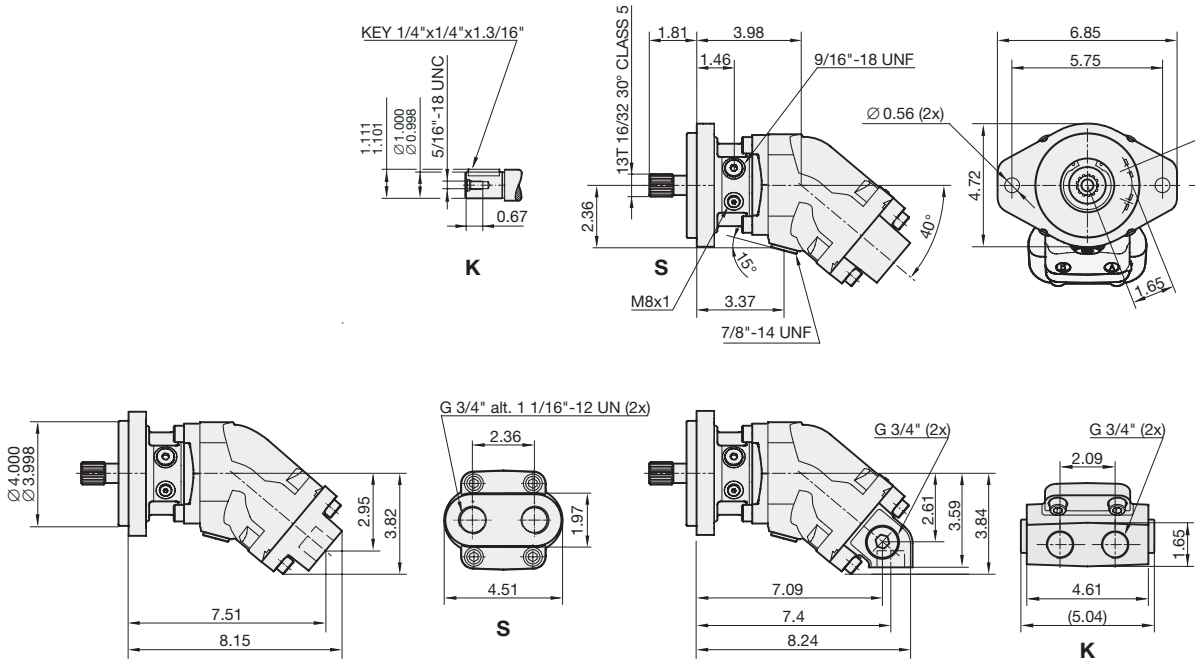

3205USS1104 Produced in Sweden by Göte Bohman / Nova Design / Gävle Offset

Sunfab North America, 3509 RT 22 East, Somerville, NJ 08876. Phone: 1-877-SUNFAB1, Fax: 908-534-2512, E-mail: sales@sunfabnorthamerica.com Web: www.sunfabnorthamerica.com
Sunfab Hydraulics AB, Box 1094, SE-824 12 Hudiksvall, Sweden. Phone: +46 650-367 00, Fax: +46 650-367 27, E-mail: sunfab@sunfab.se Web: www.sunfab.se