POMPE AD INGRANAGGI 4 FORI-ISO 1° POMPA

4 HOLES-ISO HYDRAULIC GEAR PUMPS

CODICE FAMIGLIA *FAMILY CODE* **105-023**

TANDEM NPH ISO

Fluido idraulico *Fluid*	Minerale o sintetico compatibile con guarnizioni: *Mineral or synthetic compatible with the following seals:* NBR, FKM, FPM, Nylon				
Viscosità cinematica consigliata *Kinematic viscosity suggested*	T media ambiente (°C) *Average ambient temp. (°C)*	< -10	-10÷10	10÷35	> 35
	VG (cSt = mm²/s)	22	32	46	68
Viscosità cinematica ottimale di esercizio *Optimale kinematic viscosity*	VG= 10 cSt ÷ 100 cSt				
Viscosità cinematica max consentita all'avviamento *Max kinematic viscosity suggested at the start-up*	VG= 750 cSt				
Indice di viscosità consigliato *Viscosity index suggested*	VI > 100	Temperatura di esercizio *Working temperature*	-15°C +100°C		
Grado di filtrazione *Oil filtering*	> 200 bar: 10 µm < 200 bar: 25 µm				
Pressione di aspirazione *Inlet pressure*	-0,3 ÷ 2 bar				
Senso di rotazione *Pump rotation*	Unidirezionale (DX o SX) *Unidirectional (Right or Left*				

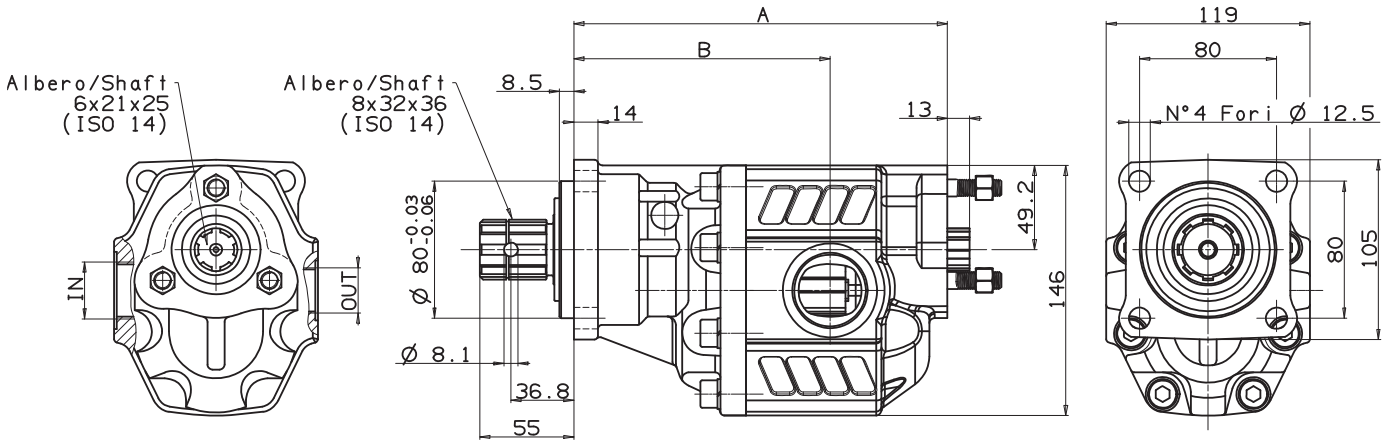

Tipo pompa *Pump type*	Rotazione *Rotation* Destra *Right*	Sinistra *Left*	IN ISO 228	OUT ISO 228	A mm	B mm	Peso *Weight* Kg
NPH-17	105-023-10179	105-023-10188	G 1/2		180	119	10.6
NPH-22	105-023-10222	105-023-10231			183.5	121.5	11
NPH-27	105-023-10277	105-023-10286			186	124	11.5
NPH-34	105-023-10348	105-023-10357	G 3/4		191	124	12.5
NPH-43	105-023-10437	105-023-10446			197	130	13
NPH-51	105-023-10517	105-023-10526			202	130.5	13.5
NPH-61	105-023-10615	105-023-10624	G 1		208	136.5	14
NPH-73	105-023-10731	105-023-10740			216	135.5	14.5
NPH-82	105-023-10820	105-023-10839	G 1 1/4		221	142.5	14.9

PREDISPOSTA PER 2A POMPA CON FLANGIA UNI

READY FOR 2ND PUMP WITH UNI FLANGE

Codice fascicolo:997-400-10510
Data: Venerdì 24 febbraio 2012
Rev: AG
Codice foglio:997-105-02305

O.M.F.B. S.p.A. Hydraulic Components
We reserve the right to make any changes without notice.
Edition 2003.03 No reproduction, however partial, is permitted.
Via Cave, 7/9 25050 Provaglio d'Iseo (Brescia) Italy Tel.: +39.030.9830611
Fax: +39.030.9839207-208 Internet:www.omfb.it e-mail:info@omfb.it

COMPANY WITH QUALITY MANAGEMENT SYSTEM CERTIFIED BY DNV = ISO 9001:2008 =

UŽSISAKYKITE internetu www.dominga.lt/eshop telefonu +370 52 322231 el. paštu info@dominga.lt

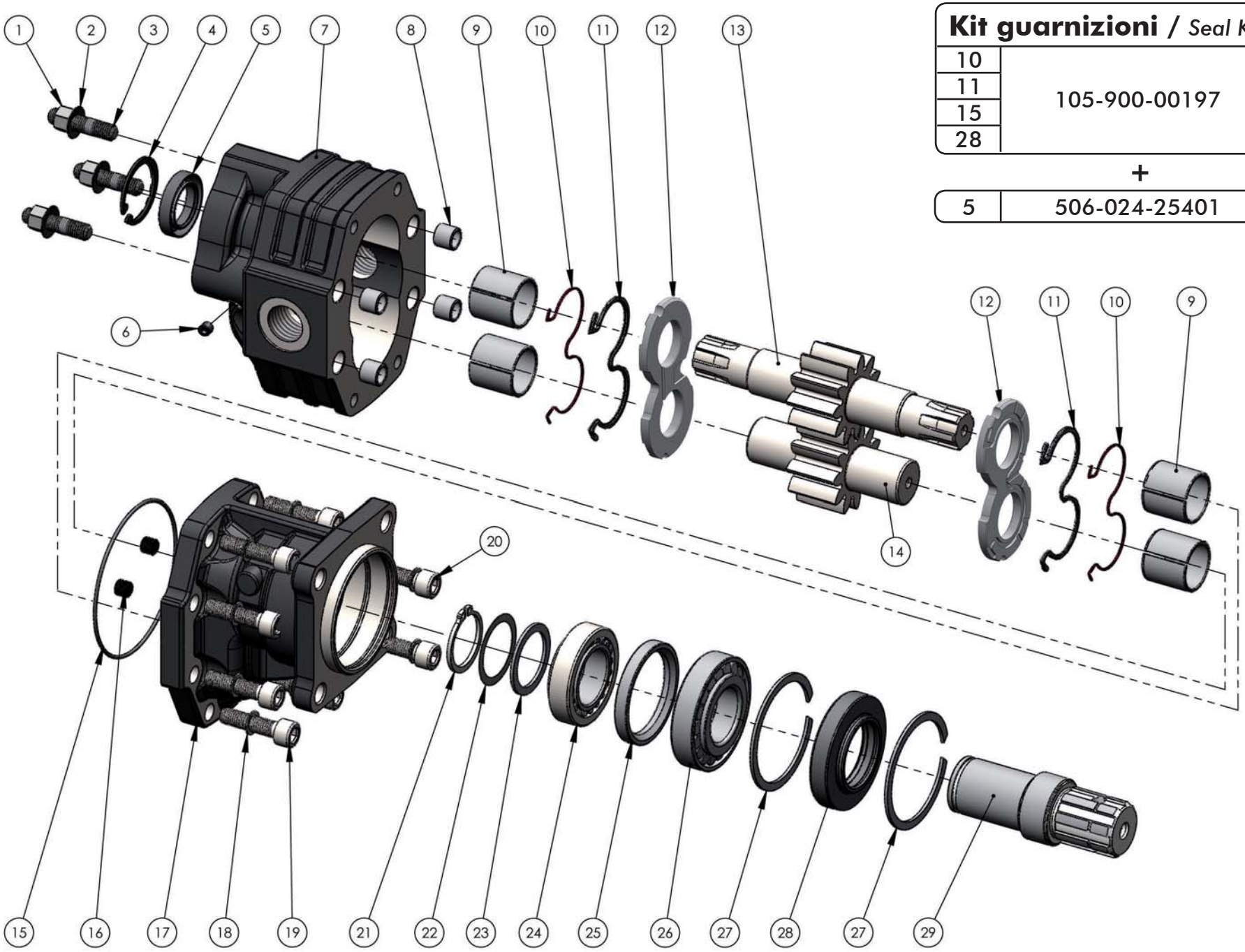

Kit guarnizioni / *Seal Kit*	
10	105-900-00197
11	
15	
28	

+

5	506-024-25401

O.M.F.B. S.p.A. Hydraulic Components
We reserve the right to make any changes without notice.
Edition 2003.03 No reproduction, however partial, is permitted.
Via Cave, 7/9 25050 Provaglio d'Iseo (Brescia) Italy Tel.: +39.030.9830611
Fax: +39.030.9839207-208 Internet:www.omfb.it e-mail:info@omfb.it

COMPANY WITH QUALITY MANAGEMENT SYSTEM CERTIFIED BY DNV
= ISO 9001:2008 =

UŽSISAKYKITE internetu www.dominga.lt/eshop telefonu +370 52 322231 el. paštu info@dominga.lt

N° / N°	17	22	27	34	43	51	61	73	82	Codice / P. Number	Descrizione / Description		Quantità / Quantity
1	•	•	•	•	•	•	•	•	•	505-004-00014	Dado M10 CH14 H10	Nut M10 CH14 H10	3
2	•	•	•	•	•	•	•	•	•	501-018-00105	Rondella elastica	Washer	3
3	•	•	•	•	•	•	•	•	•	503-004-00198	Prigioniero M10x30	Stud bolt M10x30	3
4	•	•	•	•	•	•	•	•	•	501-001-00373	Anello elastico	Circlip	1
5	•	•	•	•	•	•	•	•	•	506-024-25401	Guarnizione paraolio	Oil seal	1
6	•	•	•	•	•	•	•	•	•	504-010-00018	Grano conico 1/16"	Plug 1/16"	1
7	•									517-009-00176	Corpo pompa	Gear housing	1
		•								517-009-00229			
			•							517-009-00274			
				•						517-009-00345			
					•					517-009-00434			
						•				517-009-00514			
							•			517-009-00612			
								•		517-009-00738			
									•	517-009-00827			
8	•	•	•	•	•	•	•	•	•	501-003-00282	Spine forate di centraggio 14x12.5	Pins 14x12.5	4
9	•	•	•	•	•	•	•	•	•	533-004-00033	Boccola autolub. 28x32x30	Bushing 28x32x30	4
10	•	•	•	•	•	•	•	•	•	506-000-01097	Guarnizione antiestrusione	Back-up ring	2
11	•	•	•	•	•	•	•	•	•	506-000-01088	Guarnizione per rasamento	Thrust plate seal	2
12	•	•	•	•	•	•	•	•	•	510-010-00293	Rasamento ad occhiale	Thrust plate	2
13	•									523-022-00176	Albero dentato conduttore	Drive shaft	1
		•								523-022-00229			
			•							523-022-00274			
				•						523-022-00345			
					•					523-022-00434			
						•				523-022-00514			
							•			523-022-00612			
								•		523-022-00710			
									•	523-022-00827			
14	•									523-021-00177	Albero dentato condotto	Albero dentato condotto	1
		•								523-021-00220			
			•							523-021-00275			
				•						523-021-00346			
					•					523-021-00435			
						•				523-021-00515			
							•			523-021-00613			
								•		523-021-00711			
									•	523-021-00828			
15	•	•	•	•	•	•	•	•	•	506-000-01579	Guarnizione OR	O-Ring	1
16	•	•	•	•	•	•	•	•	•	504-010-00063	Grano conico 1/8"	Plug 1/8"	2
17	•	•	•	•	•	•	•	•	•	518-003-00116	Coperchio anteriore	Mounting cover	1
18	•	•	•	•	•	•	•	•	•	501-020-00101	Rondella elastica	Washer	8
19	•	•	•	•	•	•				502-004-00574	Vite TCE M10x40	Screw M10x40	8
							•	•	•				4
20							•	•	•	502-004-00565	Vite TCE M10x35	Screw M10x35	4
21	•	•	•	•	•	•	•	•	•	501-000-01355	Anello seeger	Seeger ring	1
22	•	•	•	•	•	•	•	•	•	529-007-00226	Rondella speciale 45x32x0,2	Special washer 45x35x0,2	1
23	•	•	•	•	•	•	•	•	•	529-007-00208	Rondella speciale 45x35x2	Special washer 45x35x2	1
24	•	•	•	•	•	•	•	•	•	510-002-00202	Cuscinetto a rulli conici 35x62x18	Tapered roller bearing 35x62x18	1
25	•	•	•	•	•	•	•	•	•	530-004-00164	Distanziale 52x64,2x8,25	Spacer 52x64,2x8,25	1
26	•	•	•	•	•	•	•	•	•	510-002-00211	Cuscinetto a rulli conici 35x72x18,25	Tapered roller bearing 35x72x18,25	1
27	•	•	•	•	•	•	•	•	•	501-000-02729	Anello elastico	Circlip	2
28	•	•	•	•	•	•	•	•	•	506-008-42723	Guarnizione paraolio	Oil seal	1
29	•	•	•	•	•	•	•	•	•	114-005-00147	Manicotto	Coupling	1

O.M.F.B. S.p.A. Hydraulic Components
Via Cave, 7/9 25050 Provaglio d'Iseo (Brescia) Italy Tel.: +39.030.9830611
Fax: +39.030.9839207-208 Internet:www.omfb.it e-mail:info@omfb.it

We reserve the right to make any changes without notice.
Edition 2003.03 No reproduction, however partial, is permitted.

COMPANY WITH QUALITY MANAGEMENT SYSTEM CERTIFIED BY DNV
= ISO 9001:2008 =

UŽSISAKYKITE internetu www.dominga.lt/eshop telefonu +370 52 322231 el. paštu info@dominga.lt

CARATTERISTICHE TECNICHE DI FUNZIONAMENTO - *TECHNICAL FEATURES*

Tipo pompa *Pump type*	Cilindrata *Displacement*	Pressione *Pressure* P1	P2	P3	Velocità max. continua *Max. continuous speed*	Velocità max. intermittente *Max. intermittent speed*	Velocità min. *Min. speed*
	cm³/rev	bar	bar	bar	rpm	rpm	rpm
NPH-17	17.04	290	315	325	2500	3000	300
NPH-22	22.15						
NPH-27	26.18						
NPH-34	33.88	280	300	310	2200	2800	
NPH-43	43.12	270	290	300	2000	2500	
NPH-51	50.82	240	260	280			
NPH-61	60.06	220	240	250	1800	2000	
NPH-73	72.88	200	220	230	1600	1800	
NPH-82	81.08	190	210	220	1500		

P1=Pressione max.continua *Max. continuous pressure* (100%)
P2=Pressione max. intermittente *Max. Intermittent pressure* (20 sec.max.)
P3=Pressione max. di punta *Max. peak pressure* (6 sec.max)

SENSO DI ROTAZIONE POMPA - *DIRECTION OF ROTATION*

Rotazione antioraria, pompa sinistra
Anti-clockwise rotation, left pump

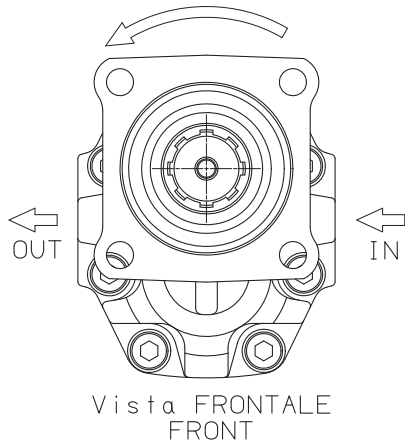

Rotazione oraria, pompa destra
Clockwise rotation, right pump

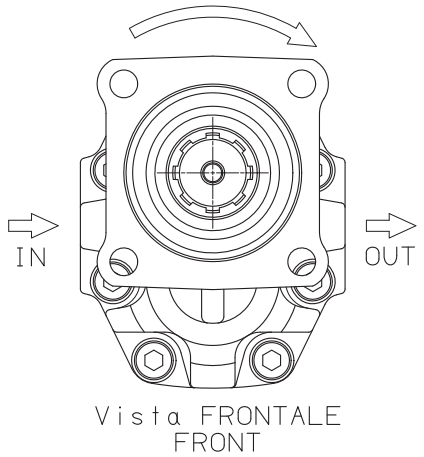

MOMENTO PESO / *MASS MOMENT*

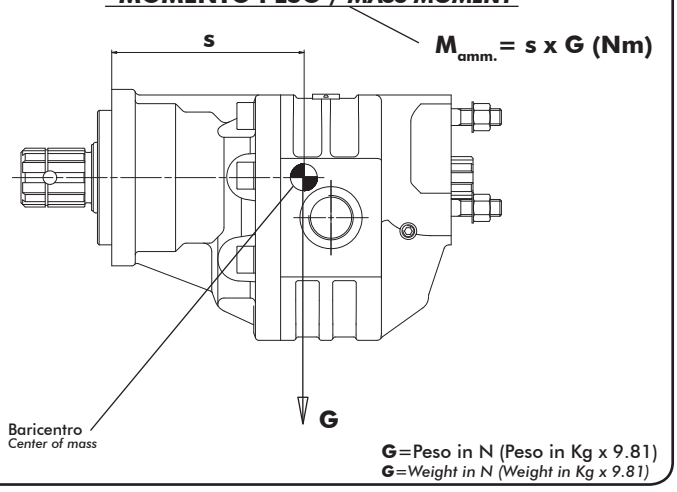

Tipo pompa - *Pump type*	S
NPH-17	92
NPH-22	94
NPH-27	98
NPH-34	100
NPH-43	103
NPH-51	105
NPH-61	108
NPH-73	112
NPH-82	115

PER MODIFICARE IL SENSO DI ROTAZIONE VEDERE ISTRUZ. 997-2-60
TO CHANGE THE DIRECTION OF ROTATION SEE INSTRUCTION 997-2-60

COMPANY WITH QUALITY MANAGEMENT SYSTEM CERTIFIED BY DNV = ISO 9001:2008 =

O.M.F.B. S.p.A. Hydraulic Components
We reserve the right to make any changes without notice.
Edition 2003.03 No reproduction, however partial, is permitted.
Via Cave, 7/9 25050 Provaglio d'Iseo (Brescia) Italy Tel.: +39.030.9830611
Fax: +39.030.9839207-208 Internet:www.omfb.it e-mail:info@omfb.it

OMFB HYDRAULIC COMPONENTS

Codice fascicolo:997-400-10510
Data: Venerdì 24 febbraio 2012
Codice foglio:997-105-02305 Rev: AG

UŽSISAKYKITE internetu www.dominga.lt/eshop telefonu +370 52 322231 el. paštu info@dominga.lt