POMPE AD INGRANAGGI FISSAGGIO 4 FORI-ISO
4 HOLES-ISO HYDRAULIC GEAR PUMPS

CODICE FAMIGLIA *FAMILY CODE* **105-011**

NPH ISO

Fluido idraulico *Fluid*	Minerale o sintetico compatibile con guarnizioni: *Mineral or synthetic compatible with the following seals:* NBR, FKM, FPM, Nylon				
Viscosità cinematica consigliata *Kinematic viscosity suggested*	T media ambiente (°C) *Average ambient temp. (°C)*	< -10	-10÷10	10÷35	> 35
	VG (cSt = mm²/s)	22	32	46	68
Viscosità cinematica ottimale di esercizio *Optimale kinematic viscosity*	VG= 10 cSt ÷ 100 cSt				
Viscosità cinematica max consentita all'avviamento *Max kinematic viscosity suggested at the start-up*	VG= 750 cSt				
Indice di viscosità consigliato *Viscosity index suggested*	VI > 100	Temperatura di esercizio *Working temperature*	-15°C +100°C		
Grado di filtrazione *Oil filtering*	> 200 bar: 10 µm < 200 bar: 25 µm				
Pressione di aspirazione *Inlet pressure*	-0,3 ÷ 2 bar				
Senso di rotazione *Pump rotation*	Unidirezionale (DX o SX) *Unidirectional (Right or Left*				

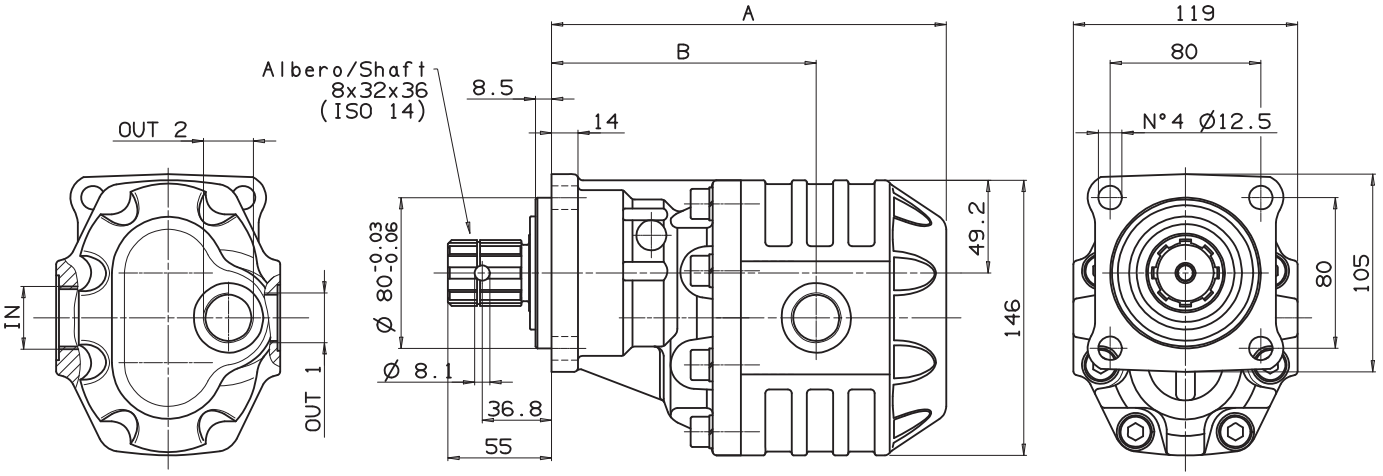

Tipo pompa *Pump type*	Rotazione *Rotation* Destra *Right*	Sinistra *Left*	IN ISO 228	OUT 1 ISO 228	OUT 2 ISO 228	A mm	B mm	Peso *Weight* Kg
NPH-17	105-011-10173	105-011-10182	G 1/2	G 1/2		168.5	119.5	11
NPH-22	105-011-10226	105-011-10235				172	121.5	11.5
NPH-27	105-011-10271	105-011-10280	G 3/4			174.5	124	12
NPH-34	105-011-10342	105-011-10351		G 3/4		179.5	125	13
NPH-43	105-011-10431	105-011-10441				185.5	130	13.5
NPH-51	105-011-10511	105-011-10520	G1			190.5	130.5	14
NPH-61	105-011-10619	105-011-10628				196.5	136.5	14.5
NPH-73	105-011-10735	105-011-10744				204.5	135.5	15
NPH-82	105-011-10824	105-011-10833	G1 1/4			209.5	140.5	15.5
NPH-100	105-011-11001	105-011-11010		G 1	G 3/4	226.5	154.5	15
NPH-125	105-011-11252	105-011-11261				242.5	158.5	17

Codice fascicolo:997-400-10510
Data: Lunedì 13 giugno 2011
Rev: AE
Codice foglio:997-105-01105

O.M.F.B. S.p.A. Hydraulic Components
Hydraulic Components
We reserve the right to make any changes without notice.
Edition 2003.03 No reproduction, however partial, is permitted.
Via Cave, 7/9 25050 Provaglio d'Iseo (Brescia) Italy Tel.: +39.030.9830611
Fax: +39.030.9839207-208 Internet:www.omfb.it e-mail:info@omfb.it

COMPANY WITH QUALITY MANAGEMENT SYSTEM CERTIFIED BY DNV
= ISO 9001:2008 =

UŽSISAKYKITE internetu www.dominga.lt/eshop telefonu +370 52 322231 el. paštu info@dominga.lt

ESPLOSO POMPE AD INGRANAGGI
GEAR PUMPS

Kit guarnizioni / *Seal Kit*	
6	105-900-00197
7	
11	
24	

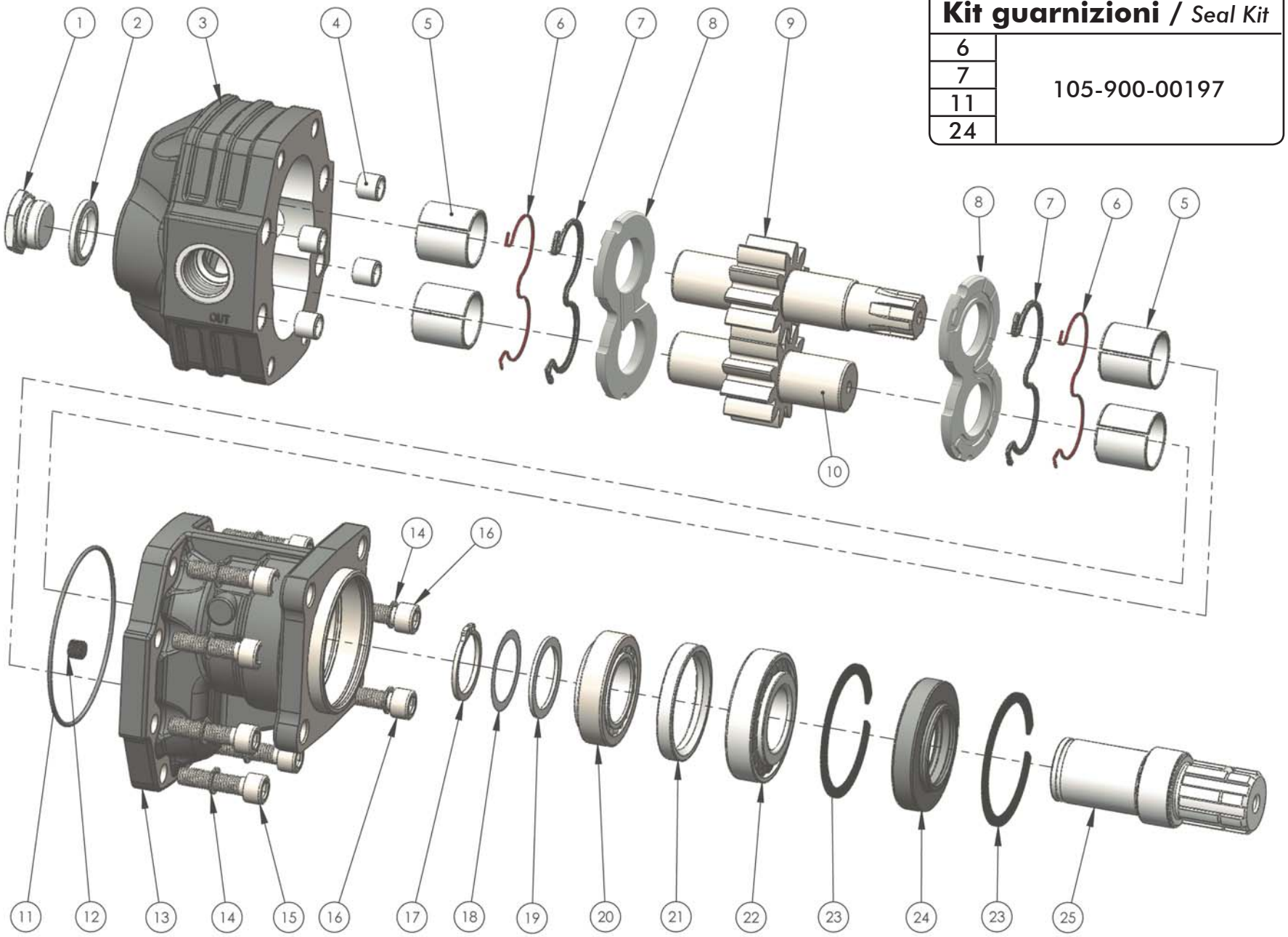

O.M.F.B. S.p.A. Hydraulic Components
We reserve the right to make any changes without notice.
Edition 2003.03 No reproduction, however partial, is permitted.
Via Cave, 7/9 25050 Provaglio d'Iseo (Brescia) Italy Tel.: +39.030.9830611
Fax: +39.030.9839207-208 Internet:www.omfb.it e-mail:info@omfb.it

COMPANY WITH QUALITY MANAGEMENT SYSTEM CERTIFIED BY DNV
= ISO 9001:2008 =

UŽSISAKYKITE internetu www.dominga.lt/eshop telefonu +370 52 322231 el. paštu info@dominga.lt

N° / N°	17	22	27	34	43	51	61	73	82	Codice / P. Number	Descrizione / Description		Quantità / Quantity
1	•	•	•							540-002-00110	Tappo Acciaio 1/2"	Steel plug 1/2"	1
				•	•	•	•	•	•	540-002-00129	Tappo Acciaio 3/4"	Steel plug 3/4"	
2	•	•	•							116-009-10129	Rondella acciaio-gomma 1/2"	Steel-rubber washer 1/2"	1
				•	•	•	•	•	•	116-009-10343	Rondella acciaio-gomma 3/4"	Steel-rubber washer 3/4"	
3	•									517-010-00173	Corpo pompa	Gear housing	1
		•								517-010-00226			
			•							517-010-00271			
				•						517-010-00342			
					•					517-010-00431			
						•				517-010-00511			
							•			517-010-00619			
								•		517-010-00717			
									•	517-010-00824			
4	•	•	•	•	•	•	•	•	•	501-003-00282	Spine forate di centraggio 14x12.5	Pins 14x12.5	4
5	•	•	•	•	•	•	•	•	•	533-004-00033	Boccola autolub. 28x32x30	Bushing 28x32x30	4
6	•	•	•	•	•	•	•	•	•	506-000-01097	Guarnizione antiestrusione	Back-up ring	2
7	•	•	•	•	•	•	•	•	•	506-000-01088	Guarnizione per rasamento	Thrust plate seal	2
8	•	•	•	•	•	•	•	•	•	510-010-00293	Rasamento ad occhiale	Thrust plate	2
9	•									523-020-00178	Albero dentato conduttore	Drive shaft	1
		•								523-020-00221			
			•							523-020-00276			
				•						523-020-00347			
					•					523-020-00436			
						•				523-020-00516			
							•			523-020-00614			
								•		523-020-00712			
									•	523-020-00829			
10	•									523-021-00177	Albero dentato condotto	Driven shaft	1
		•								523-021-00220			
			•							523-021-00275			
				•						523-021-00346			
					•					523-021-00435			
						•				523-021-00515			
							•			523-021-00613			
								•		523-021-00711			
									•	523-021-00828			
11	•	•	•	•	•	•	•	•	•	506-000-01579	Guarnizione OR (2x95)	O-ring (2x95)	1
12	•	•	•	•	•	•	•	•	•	504-010-00063	Grano conico 1/8"	Plug 1/8"	1
13	•	•	•	•	•	•	•	•	•	518-003-00116	Coperchio anteriore	Mounting cover	1
14	•	•	•	•	•	•	•	•	•	501-020-00101	Rondella elastica	Washer	8
15	•	•	•	•	•	•	•	•		502-004-00574	Vite TCE M10x40	Screw M10x40	8
									•				6
16									•	502-004-00565	Vite TCE M10x35	Screw M10x35	2
17	•	•	•	•	•	•	•	•	•	501-000-01355	Anello seeger	Seeger ring	1
18	•	•	•	•	•	•	•	•	•	529-007-00226	Rondella speciale 45x35x0,,2	Special washer 45x35x0,2	1
19	•	•	•	•	•	•	•	•	•	529-007-00208	Rondella speciale 45x35x2	Special washer 45x35x2	1
20	•	•	•	•	•	•	•	•	•	510-002-00202	Cuscinetto a rulli conici 35x62x18	Tapered roller bearing 35x62x18	1
21	•	•	•	•	•	•	•	•	•	530-004-00164	Distanziale 52x64,2x8,25	Spacer 52x64,2x8,25	1
22	•	•	•	•	•	•	•	•	•	510-002-00211	Cuscinetto a rulli conici 35x72x18,25	Tapered roller bearing 35x62x18	1
23	•	•	•	•	•	•	•	•	•	501-000-02729	Anello elastico	Circlip	2
24	•	•	•	•	•	•	•	•	•	506-008-42723	Guarnizione paraolio	Oil seal	1
25	•	•	•	•	•	•	•	•	•	114-005-00147	Manicotto	Coupling	1

O.M.F.B. S.p.A. Hydraulic Components
Via Cave, 7/9 25050 Provaglio d'Iseo (Brescia) Italy Tel.: +39.030.9830611
Fax: +39.030.9839207-208 Internet:www.omfb.it e-mail:info@omfb.it

Edition 2003.03 No reproduction, however partial, is permitted.
We reserve the right to make any changes without notice.

COMPANY WITH QUALITY MANAGEMENT SYSTEM CERTIFIED BY DNV = ISO 9001:2008 =

UŽSISAKYKITE internetu www.dominga.lt/eshop telefonu +370 52 322231 el. paštu info@dominga.lt

ESPLOSO POMPE AD INGRANAGGI
GEAR PUMPS

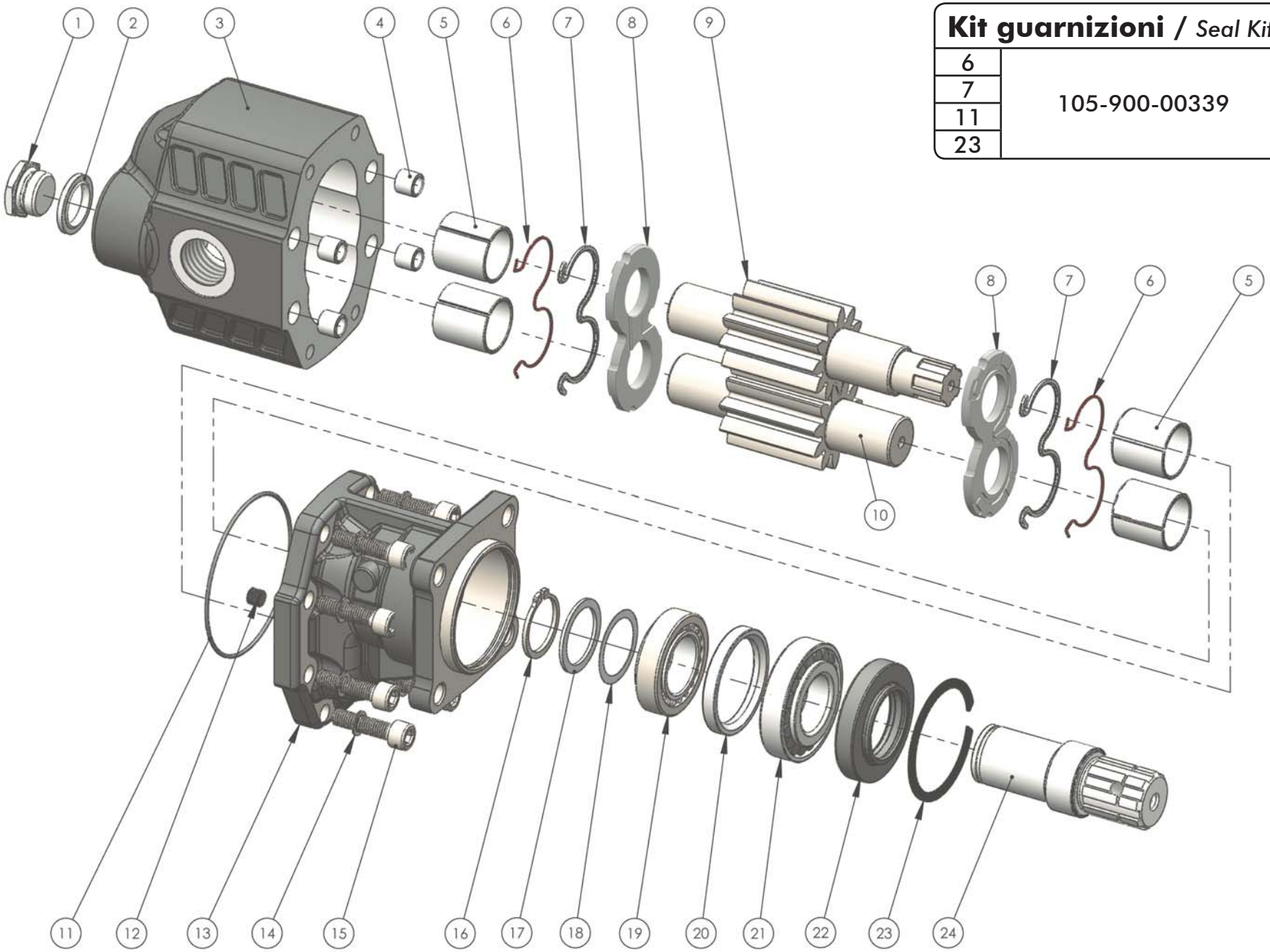

Kit guarnizioni / *Seal Kit*	
6	105-900-00339
7	
11	
23	

COMPANY WITH QUALITY MANAGEMENT SYSTEM CERTIFIED BY DNV
= ISO 9001:2008 =

O.M.F.B. S.p.A. Hydraulic Components
We reserve the right to make any changes without notice.
Edition 2003.03 No reproduction, however partial, is permitted.
Via Cave, 7/9 25050 Provaglio d'Iseo (Brescia) Italy Tel.: +39.030.9830611
Fax: +39.030.9839207-208 Internet:www.omfb.it e-mail:info@omfb.it

UŽSISAKYKITE internetu www.dominga.lt/eshop telefonu +370 52 322231 el. paštu info@dominga.lt

ESPLOSO POMPE AD INGRANAGGI
GEAR PUMPS

N° N°	100	125	Codice P. Number	Descrizione Description		Quantità Quantity
1	•	•	540-002-00129	Tappo Acciaio 3/4"	Steel plug 3/4"	1
2	•	•	116-009-10343	Rondella acciaio-gomma 3/4"	Steel-rubber washer 3/4"	1
3	•		517-010-00995	Corpo pompa	Gear housing	1
		•	517-010-01252			
4	•	•	501-003-00282	Spine forate di centraggio 14x12.5	Pins 14x12.5	4
5	•	•	533-004-00060	Boccola autolub. 30x34x35	Bushing 30x34x35	4
6	•	•	506-000-01284	Guarnizione antiestrusione	Back-up ring	2
7	•	•	506-000-01275	Guarnizione per rasamento	Thrust plate seal	2
8	•	•	510-010-00346	Rasamento ad occhiale	Thrust plate	2
9	•		523-023-01003	Albero dentato conduttore	Drive shaft	1
		•	523-023-01254			
10	•		523-023-01012	Albero dentato condotto	Driven shaft	1
		•	523-023-01263			
11	•	•	506-000-01579	Guarnizione OR (2x95)	O-ring (2x95)	1
12	•	•	504-010-00063	Grano conico 1/8"	Plug 1/8"	1
13	•	•	518-003-00152	Coperchio anteriore	Mounting cover	1
14	•	•	501-020-00101	Rondella elastica	Washer	8
15	•	•	502-004-00574	Vite TCE M10x40	Screw M10x40	8
16	•	•	501-000-01355	Anello seeger	Seeger ring	1
17	•	•	529-007-00226	Rondella speciale 45x35x0,,2	Special washer 45x35x0,2	1
18	•	•	529-007-00208	Rondella speciale 45x35x2	Special washer 45x35x2	1
19	•	•	510-002-00202	Cuscinetto a rulli conici 35x62x18	Tapered roller bearing 35x62x18	1
20	•	•	530-004-00164	Distanziale 52x64,2x8,25	Spacer 52x64,2x8,25	1
21	•	•	510-002-00211	Cuscinetto a rulli conici 35x72x18,25	Tapered roller bearing 35x72x18,25	1
22	•	•	501-000-02729	Anello elastico	Circlip	2
23	•	•	506-008-42723	Guarnizione paraolio	Oil seal	1
24	•	•	114-005-00147	Manicotto	Coupling	1

O.M.F.B. S.p.A. Hydraulic Components
Via Cave, 7/9 25050 Provaglio d'Iseo (Brescia) Italy Tel.: +39.030.9830611
Fax: +39.030.9839207-208 Internet:www.omfb.it e-mail:info@omfb.it

Edition 2003.03 No reproduction, however partial, is permitted.
We reserve the right to make any changes without notice.

COMPANY WITH QUALITY MANAGEMENT SYSTEM CERTIFIED BY DNV = ISO 9001:2008 =

UŽSISAKYKITE internetu www.dominga.lt/eshop telefonu +370 52 322231 el. paštu info@dominga.lt

CARATTERISTICHE TECNICHE DI FUNZIONAMENTO - *TECHNICAL FEATURES*

Tipo pompa *Pump type*	Cilindrata *Displacement* cm³/rev	Pressione *Pressure* P1 bar	P2 bar	P3 bar	Velocità max. continua *Max. continuous speed* rpm	Velocità max. intermittente *Max. intermittent speed* rpm	Velocità min. *Min. speed* rpm
NPH-17	17.04	290	315	325	2500	3000	300
NPH-22	22.15						
NPH-27	26.18						
NPH-34	33.88	280	300	310	2200	2800	
NPH-43	43.12	270	290	300	2000	2500	
NPH-51	50.82	240	260	280			
NPH-61	60.06	220	240	250	1800	2000	
NPH-73	72.88	200	220	230	1600	1800	
NPH-82	81.08	190	210	220	1500		
NPH-100	98.18	180	200				
NPH-125	122.72	160	180	200			

P1=Pressione max.continua *Max. continuous pressure* (100%)
P2=Pressione max. intermittente *Max. Intermittent pressure* (20 sec.max.)
P3=Pressione max. di punta *Max. peak pressure* (6 sec.max)

SENSO DI ROTAZIONE POMPA - *DIRECTION OF ROTATION:*

Rotazione antioraria, pompa sinistra
Anti-clockwise rotation, left pump

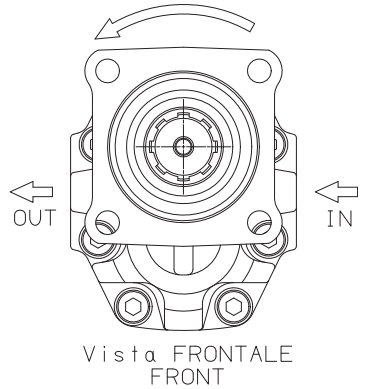

Rotazione oraria, pompa destra
Clockwise rotation, right pump

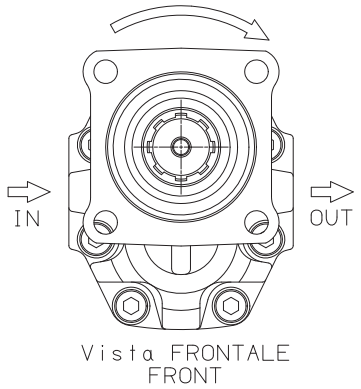

MOMENTO PESO / *MASS MOMENT*

$M_{amm.} = s \times G$ (Nm)

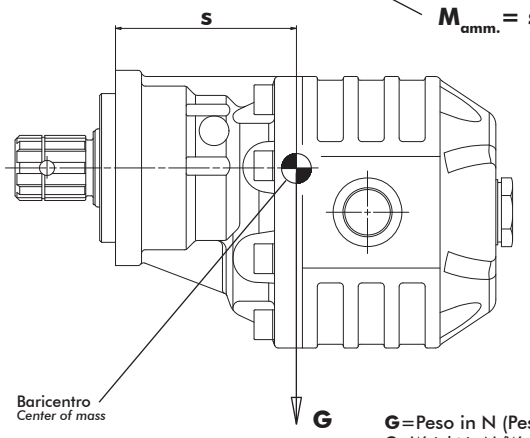

G=Peso in N (Peso in Kg x 9.81)
G=*Weight in N (Weight in Kg x 9.81)*

Tipo pompa - *Pump type*	s
NPH-17	93
NPH-22	94
NPH-27	96
NPH-34	99
NPH-43	101
NPH-51	103
NPH-61	106
NPH-73	110
NPH-82	113
NPH-100	121
NPH-125	130

PER MODIFICARE IL SENSO DI ROTAZIONE VEDERE ISTRUZ. 997-2-42
TO CHANGE THE DIRECTION OF ROTATION SEE INSTRUCTION 997-2-42

LA POMPA E' MUNITA DI PARAOLIO BIDIREZIONALE E DI CUSCINETTI A RULLI CONICI SULL'ALBERO DI USCITA
THE PUMP IS COMPLETE WITH DOUBLE OIL-SEAL AND TAPERED ROLLER BEARING ON THE OUTPUT SHAFT

Codice fascicolo:997-400-10510
Data: Lunedì 13 giugno 2011
Codice foglio:997-105-01105 Rev: AE

COMPANY WITH QUALITY MANAGEMENT SYSTEM CERTIFIED BY DNV = ISO 9001:2008 =

O.M.F.B. S.p.A. Hydraulic Components
We reserve the right to make any changes without notice.
Edition 2003.03 No reproduction, however partial, is permitted.
Via Cave, 7/9 25050 Provaglio d'Iseo (Brescia) Italy Tel.: +39.030.9830611
Fax: +39.030.9839207-208 Internet:www.omfb.it e-mail:info@omfb.it

OMFB HYDRAULIC COMPONENTS

UŽSISAKYKITE internetu www.dominga.lt/eshop telefonu +370 52 322231 el. paštu info@dominga.lt