HF C200-06

dc power packs for single acting function

HYDRAULFUNKTION AB

HF C200-06

power packs for single acting functions

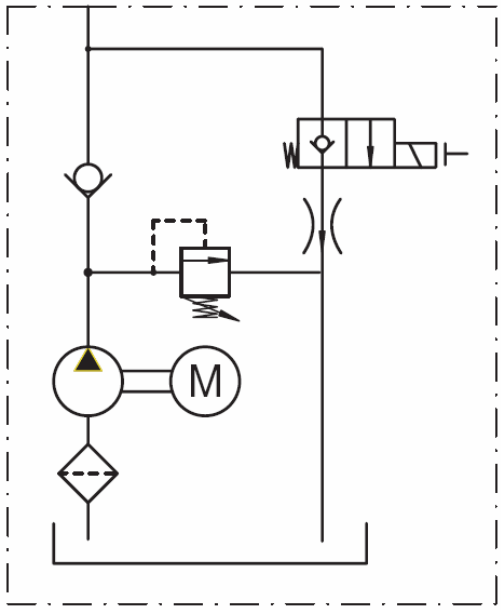

C200-06 hydraulic circuit

features:

manifold block:	C200-06
dc motors:	2kW – 3kw (12V, 24V, 48V)
gear pumps:	group 1 (0,85ccm – 4,3ccm)
tanks:	plastic tanks (5L, 6L, 8L, 12L)

dc motors:

- 2kW	12V, 24V, 48V
- 3kW	12V, 24V
- 3kW with fan	12V, 24V, 48V
- 4kW with fan	24V

gear pumps:

- 0,85ccm	nominal pressure:	250bar
- 1,2ccm	max. pressure:	280bar
- 1,7ccm	pressure peaks:	300bar
- 2,6ccm		
- 3,2ccm		
- 4,3ccm		

other pump displacements and pressure ratings available on request

tanks:

plastic tanks usable for vertical and horizontal mounting

nominal	horizontal*	vertical*
5 L	5,5 L	5,9 L
6 L	7,1 L	6,5 L
8 L	9,9 L	8,7 L
12 L	12,7 L	11,2 L

*usable oil volumes

Special customer requirements

If you have any special requests, please contact our sales department. We are dedicated to find a solution that fulfils your needs. If possible we can develop components according to your specifications.

HF C200-06

dc power packs for single acting function

HYDRAULFUNKTION AB

Examples:

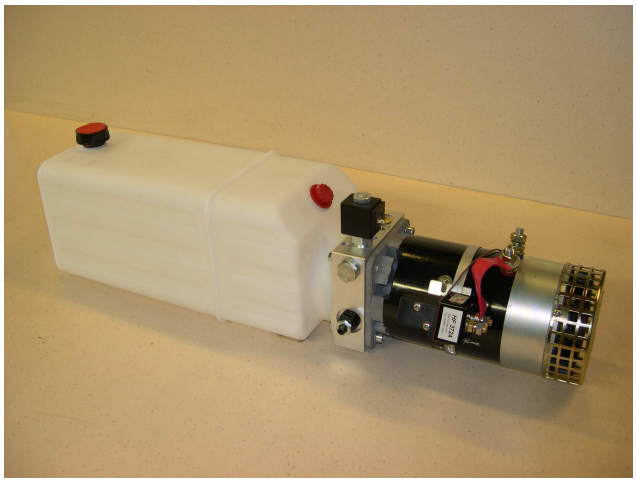

24C20-06-3F-32-8P

dc motor:	3kW (24V) with fan
gear pump:	3,2ccm /rev
oil tank:	8 Liter (usable vol. 9,9 L)

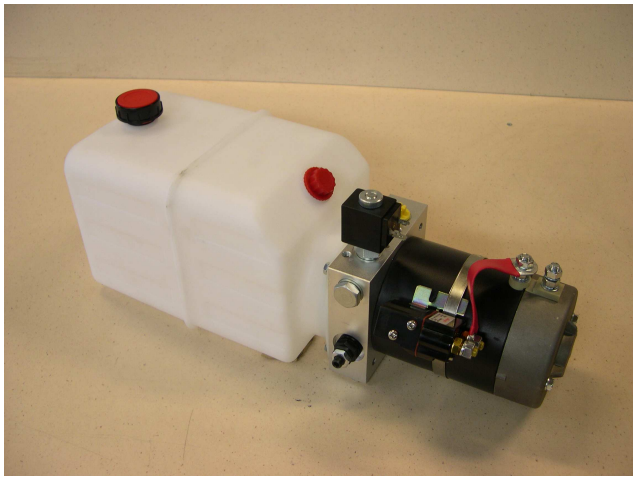

12C20-06-20-17-5P

dc motor:	2kW (12V)
gear pump:	1,7ccm /rev
oil tank:	5 Liter (usable vol. 5,5 L)

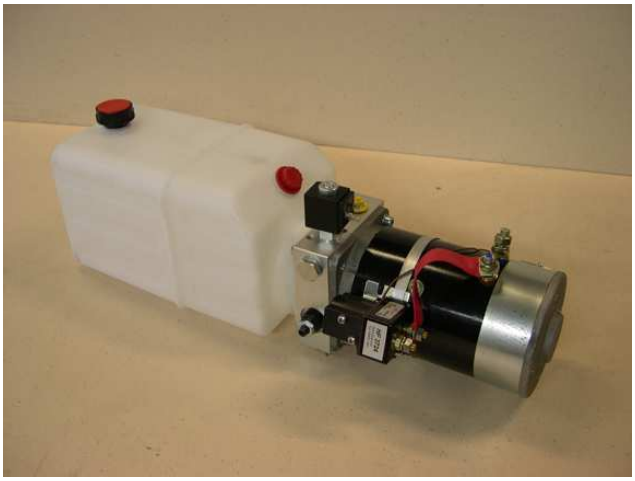

24C20-06-30-26-6P

dc motor:	3kW (24V)
gear pump:	2,6ccm /rev
oil tank:	6 Liter (usable vol. 7,1 L)