Nederman

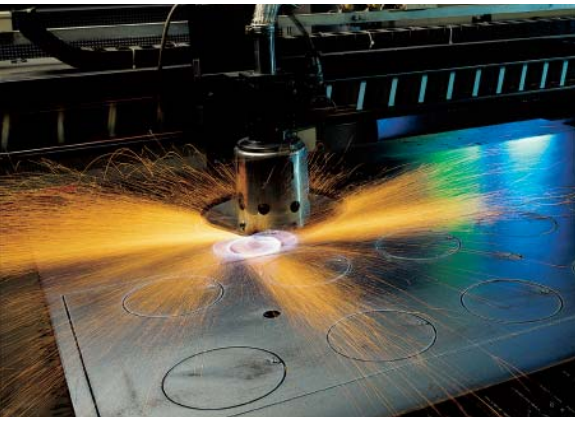

FM Filter

Suitable for collection of most fine dusts including metal grinding, welding fumes and most powders

Nederman

FMK Feature

Bench Grinding • Cutting • Bagging Operations
Batch Feeders • Conveyors • Mixing

1,800 - 10,500 m³/h

Suitable for collection of many fine dusts including metal grinding, solid surface and most powders

- Cassette offers ample filter area and lasts longer than cartridge
- Compact design
- Compressed air cleaning
- Various filtration medias available
- Galvanized construction for indoor or outdoor placement
- Integral or remote mounted fans available

Uses Cassette type filters

FMK25 – X E/X

Cassette filter FMK25
No. of cassettes
Single module
No. of filter rows per cassette, 4 or 6

Type	No. of cassettes	Filter area (m²)	Max. air f ow (m³/h) *
FMK25-2E/4	2	15	1,800
FMK25-2E/6	2	22	2,600
FMK25-4E/4	4	29	3,400
FMK25-4E/6	4	44	5,200
FMK25-6E/4	6	44	5,200
FMK25-8E/4	8	58	7,000
FMK25-6E/6	6	66	8,000
FMK25-8E/6	8	88	10,500

* Max. air flow is dependant on the actual dust type etc.

How FMK Works

...during normal operation

1. During normal operation, the dust laden air from the plant travels down the supply duct 1
2. A standard baffle 2 is mounted at the inlet of the filter to break up the air flow and direct the dust downward into the hopper section 3 while protecting the filter media from abrasive dusts
3. The lighter dust collects on the outside of the filter cassettes 4 as clean air passes through to the inside of each filter tube 6. Finally, the clean air travels through the air handling fan 5 where it could be returned to the plant or exhausted outdoors
4. The heavier dust settles in the hopper section 3 where it can be discharged into a metal bin 7 or through a rotary air lock

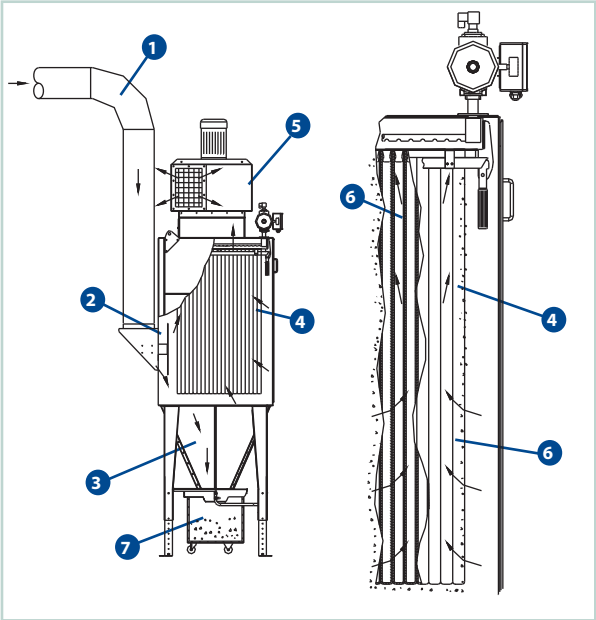

...while cleaning

1. The FMK utilizes a Delta-P gauge to control the compressed air cleaning. In essence, the filter cleans itself when it needs to!
2. A compressed air line 9 must be connected to one end of the compressed air manifold 8
3. A solenoid valve opens to allow compressed air from the compressed air manifold 8 into the jet tubes 10. The jet tubes are aligned above EACH row in the filter cassette
4. The downward blast blows the dust off the filter cassette 4 (from the inside out) where it settles into the hopper section 3 to be collected in the metal bin 7 or discharged through a rotary air lock

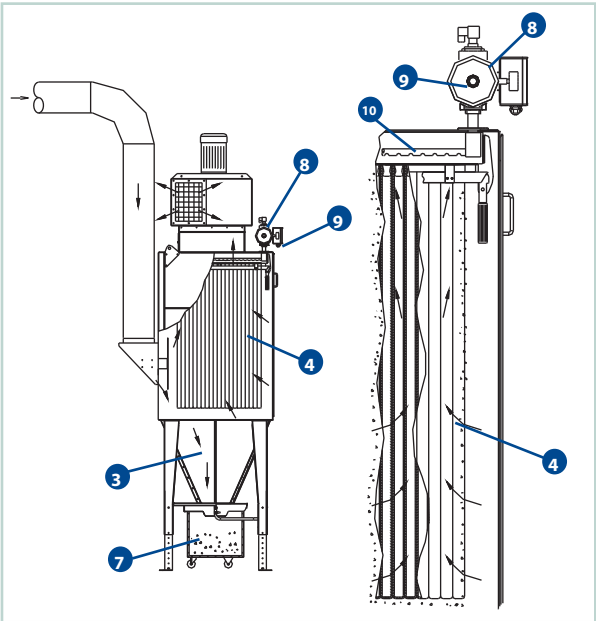

Nederman

FMC Feature

Bench Grinding • Cutting • Bagging Operations
Welding • Conveyors • Mixing • Laser Cutting

3,200 - 21,200 m³/h

Suitable for collection of most fine dusts including metal grinding, welding fumes and most powders

- Vertical cartridge configuration to avoid build- up of dust on cartridge
- Easy removal of cartridges through use of unique guide rails
- Compressed air cleaning
- Various filtration medias available
- Galvanized construction for indoor or outdoor placement
- Integral or remote mounted fans available

Uses Cartridge type filters

FMC200 – X Y

Cartridge filter FMC200
No. of cartridge modules
Height of modules L or A

Type	No. of cartridges	Filter area (m^2)	Max. air f ow (m^3/h)*	Type	No. of cartridges	Filter area (m^2)	Max. air f ow (m^3/h)*
FMC200-2L	8	Standard: 32	3,200	FMC200-2A	8	Standard: 53	5,300
-	8	Cellulose: 72	3,200	-	8	Cellulose: 116	5,300
FMC200-4L	16	Standard: 64	6,400	FMC200-4A	16	Standard: 106	10,600
-	16	Cellulose: 144	6,400	-	16	Cellulose: 232	10,600
FMC200-6L	24	Standard: 96	9,600	FMC200-6A	24	Standard: 159	15,900
-	24	Cellulose: 216	9,600	-	24	Cellulose: 348	15,900
FMC200-8L	32	Standard: 128	12,800	FMC200-8A	32	Standard: 212	21,200
-	32	Cellulose: 288	12,800	-	32	Cellulose: 464	21,200

*Max. air flow is dependant on the actual dust type etc.

How FMC Works

...during normal operation

1. During normal operation, the dust laden air from the plant travels down the supply duct 1
2. A standard baffle 2 is mounted at the inlet of the filter to break up the air flow and direct the dust downward into the hopper section 3 while protecting the filter cartridges from abrasive dusts
3. The lighter dust collects on the outside of the filter cartridges 4 as clean air passes through to the inside of each cartridge 6. Finally, the clean air travels through the air handling fan 5 where it could be returned to the plant or exhausted outdoors
4. The heavier dust settles in the hopper section 3 where it can be discharged into a metal bin 7 or through a rotary air lock

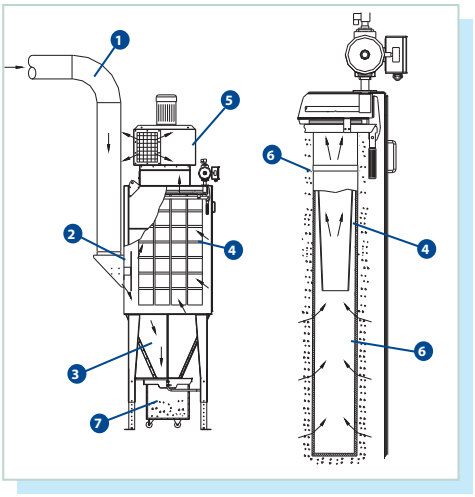

...while cleaning

1. The FMC utilizes a Delta-P gauge to control the compressed air cleaning. In essence, the filter cleans itself when it needs to!
2. A compressed air line 9 must be connected to one end of the compressed air manifold 8
3. A solenoid valve opens to allow compressed air from the compressed air manifold 8 into the jet tubes 10. The jet tubes are aligned above EACH cartridge
4. Our patented Uniclean sleeve 11 contains the blast of compressed air at the top of each cleaning from the top of the cartridge to the bottom
5. The downward blast blows the dust off the filter cartridge 4 (from the inside out) where it settles into the hopper section 3 to be collected in the metal bin 7 or discharged through a rotary air lock

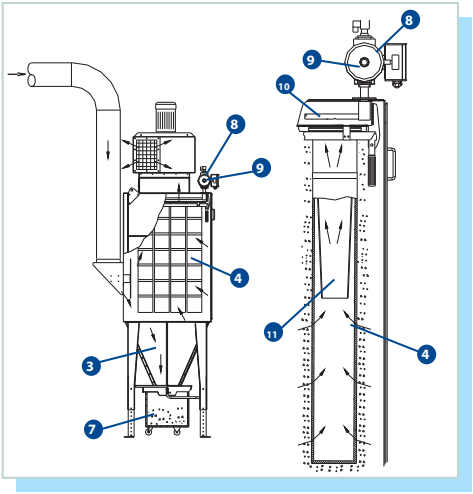

UniClean® the intelligent cleaning system

The FMC Filter has been developed with a new and unique cleaning system, now being patented. The special design of UniClean® cartridges ensures uniform effective cleaning over the entire length of the cartridges.

This is linked to a pressure sensitive 'clean-on-demand' system that reduces compressed air consumption and maximizes cartridge life.

UniClean® in detail

UniClean® provides the same cleaning pressure over the whole length of the cartridge during one cleaning impulse (see figure 2). With conventional cartridges, the formation of dust cake at the top – where cleaning is less effective – causes this area to clog up. The effective filtration surface is reduced.

The UniClean® concept overcomes this problem, dust accumulations being directed towards the middle of the cartridge. Another advantage is that it guarantees uniform cleaning pressure, as explained above.

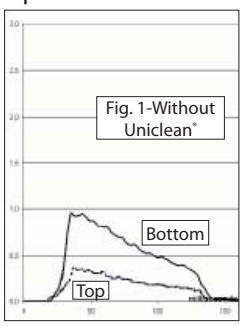

The internal cleaning pressure within UniClean® cartridges is considerably more than that for conventional cartridges with a similar reverse jet cleaning system. (Compare figures 1 and 2).

Effective cleaning reduces the number of cleaning impulses required. Consequently, the lifetime of the filter medium is longer and energy consumption for cleaning lower.

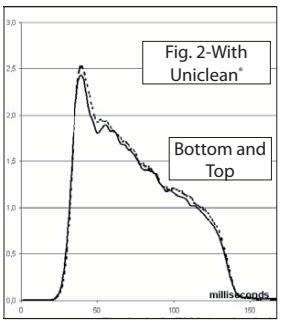

Patents
Germany:
19909075.0

International:
PCT/EP00/01801

Filter controller

- Differential pressure is displayed in the LED
- Reduced compressed air consumption possible
- High-pressure alarm
- Connection of up to 160 valves to one main controller
- Parameter setting
- Bright diodes visible from long distance
- Operating hours counter
- IP65 protection
- Three Down Time Cleaning Methods

FM Fan

Type	Motor size (kW)	Effciency (%)	Max. recomm. air flow (m^3/h)
FM620	3.0	82	3,000
FM622	4.0	82	4,000
FM625	5.5	82	5,000
FM825	7.5	82	6,000
FM831	11.0	82	8,000
FM835	15.0	81	10,000
FM1000	18.5	82	16,000

FMZ Filters for explosion dust

ATEX

Both the FMK and FMC Filters are made in special versions suitable for explosive dusts. The FMKZ25 and FMCZ200 are designed for explosive dusts and contains a type certificate by a Notified

Body under the ATEX directive. The certificate identifies the interior raw gas section of the filter as zone 20 and allows Pred up to 0.3 bar.

Technical parameters		
Type	Standard number of explosion relief panels	
	St1	St2
FMCZ200-2L	1	2
FMCZ200-4L	2	2
FMCZ200-6L	2	3
FMCZ200-8L	2	3
FMCZ200-2A	2	2
FMCZ200-4A	2	2
FMCZ200-6A	2	3
FMCZ200-8A	3	4

Standard explosion vents 410x410.
Filter body and hopper :
St1, K_{st} = max.200 bar x m/s and P_{max} = 9 bar.
St2, K_{st} = max.300 bar x m/s and P_{max} = 9 bar.
St3, K_{st} = max.600 bar = special order.

When ordering please specify:
- Dust characteristics K_{st} and P_{max}.
- Zone-rating of place for installation (Non-zone or Zone 22)

Marking
- The St1 version is marked Ex II D St1.
- The FMCZ200 filter body in the St2 version is marked: Ex II D St2.
- The marking is based on product certification by FTZU No. 1026

FM Filter Options

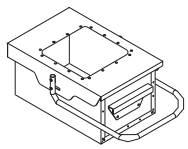

Bin

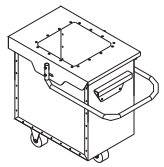

Bin with wheels

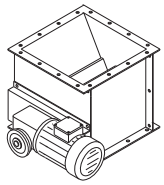

NRS3 Rotary Valve

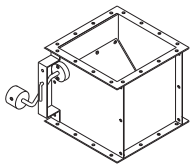

NFUS3 counter balanced dump valve

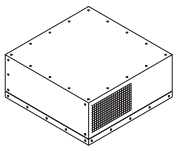

Silencer for FM Fan

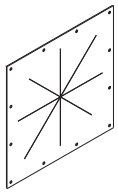

Explosion panel

Industry we serve:

Air Pollution Control Solution

Nederman focuses on individual solutions for customer needs. We leverage the experience and expertise of air cleaning systems for wide range of applications.

Aerospace Industry

Aluminum Industry

Cement Industry

Chemical Industry

Foundry & Shot Blast Industry

Jewelry Industry

Metal Industry

Painting Industry

Pharmaceutical Industry

Plastic Industry

Rubber Industry

The Nederman Group is one of the world‘s leading suppliers of products and solutions within the environmental technology sector, focusing on industrial air filtration and recycling.

Nederman products and solutions contribute to reducing the environmental impact from industrial production processes and to creating a safe and clean working environment whilst boosting production efficiency.

The Group´s offering covers everything from the design stage through to installation, commissioning and servicing.
Nederman has subsidiaries in 29 countries and agents and distributors in over 30 countries.

Nederman is ISO 9001 and 14001 certified. The Group develops and produces in its own manufacturing and assembly units in Europe, North America and Asia.

In 2010 Nederman acquired Dantherm Filtration, thereby forming the world´s leading Group within industrial air filtration.

The Group is listed on Nasdaq OMX Stockholm; it has about 1400 employees and a turnover of about 2 billion SEK

Nederman
www.nederman.com

Nederman Sales companies in: Australia, Austria, Belgium, Brazil, Canada, China, Czech Rep. Denmark, France, Germany, Hungary, India, Indonesia, Ireland, Malaysia, Northern Ireland, Norway, Poland, Portugal, Romania, Russia, Slovak Republic, Spain, Sweden, Turkey, United Kingdom, USA, Thailand, Vietnam.
Nederman Agents in: Bulgaria, Cyprus, Egypt, Estonia, Finland, Greece, Holland, Hongkong, Iceland, Iran, Ireland, Italy, Japan, Korea, Latvia, Lithuania, Malaysia, New Zealand, Philippines, Saudi Arabia, Serbia, Singapore, Slovenia, South Africa, Switzerland, Taiwan R.O.C, Thailand, Turkey, United Arab Emirates